CONCEPTUAL DESIGN REPORT

BULK FUEL UPGRADES

CITY OF KASAAN

Prepared for:
State of Alaska
Alaska Energy Authority /
Rural Energy Group

FINAL REPORT

Prepared By:
CRW Engineering Group
3940 Arctic Boulevard, Suite 300
Anchorage, Alaska 99503
(907) 562-3252

November 1, 2005

EXECUTIVE SUMMARY

This Conceptual Design Report was prepared by CRW Engineering Group, LLC for the Alaska Energy Authority / Rural Energy Group (AEA). The purpose of this study is to provide a conceptual design and construction cost estimate for upgrading fuel storage and handling facilities for the community of Kasaan, Alaska, located on the east side of Prince of Wales Island, approximately 30 air miles northwest of Ketchikan and 25 road miles from Thorne Bay.

Representatives from AEA and CRW conducted a site visit to Kasaan on March 12, 2004. During the site visit AEA Project Manager Bryan Carey and CRW engineer Karl Hulse met with local leaders to discuss the Bulk Fuel Upgrade (BFU) Program policies and goals, and documented the community's current fuel storage and handling facilities.

The community has one existing tank farm with a gross capacity of approximately 10,000-gallons. The tank farm, owned and operated by the City of Kasaan, consists of two 5,000-gallon single wall horizontal tanks (one each diesel and gasoline). The tanks are situated in a 12-inch deep concrete containment basin measuring approximately 28-feet square. A wood framed structure with sheet metal siding on three sides encloses the entire facility. The open front of the structure provides access for filling and for operating the hose reel dispensers mounted on the tank faces.

The facility does not include truck transfer secondary containment areas or proper clearances to conduct code-compliant dispensing. The existing tanks are reportedly over 20 years old and exhibit significant corrosion scaling and pitting.

The existing site is owned by the Village Corporation (Kavilco Inc.) and, reportedly, leased to the City. The City operates and maintains the tank farm to provide fuel for the standby power plant, heating of community buildings and for retail sales to local residents.

The community currently receives fuel deliveries by commercial truck haul out of Thorne Bay (Petro Alaska, Inc.). Diesel fuel is delivered to the facility on a bimonthly basis while gasoline is delivered approximately every three months.

The proposed project scope of work includes the following upgrades:

- Installation of two new 5,000-gallon, protected, horizontal bulk storage/dispensing tanks, a new bulk fuel transfer area and a remote dual product dispenser. The new bulk tanks will be placed within the existing concrete containment area and the existing overhead enclosure will remain.
- Approximately 80 linear feet of dual 2-in schedule 80 welded steel pipelines between the bulk tanks and the dispenser.
- New electrical controls as required.

- EPA-required spill contingency equipment.
- Decommissioning of existing tanks replaced by the project (as funding permits).

The proposed project schedule, subject to availability of funding, calls for design and permitting during the winter of 2005, and construction beginning spring 2006.

The total project cost, including all design, supervision, contract administration, construction, inspection, permitting and a 20 percent contingency, is estimated to be $629,000 which equates to a unit cost of $62.90 per gallon based on a gross storage capacity of 10,000-gallons.

TABLE OF CONTENTS

Section/Title **Page**

EXECUTIVE SUMMARY ES-1

1.0 PROGRAM OVERVIEW 1

2.0 COMMUNITY OVERVIEW 3

3.0 SITE VISITS AND COMMUNITY INVOLVEMENT 4
- 3.1 PARTIES INTERESTED IN PARTICIPATION 4
- 3.2 CONTACTS 4

4.0 EXISTING FACILITIES 5
- 4.1 EXISTING BULK FUEL TANK FARMS 5
- 4.2 FUNCTION AND CAPACITY 5
- 4.3 CURRENT OPERATION AND MAINTENANCE RESPONSIBILITIES 6
- 4.4 EXISTING FUEL TRANSFER CAPABILITIES 6
- 4.5 REGULATORY PLANS ON FILE 6
- 4.6 EXISTING CONTAMINATION AND CITATIONS 7
- 4.7 EQUIPMENT SUITABLE FOR REUSE 7

5.0 FUEL STORAGE RECOMMENDATIONS 8
- 5.1 STORAGE CAPACITY CONSIDERATIONS 8
  - 5.1.1 Historical Fuel Use 8
  - 5.1.2 Planned Infrastructure Improvements 9
    - 5.1.2.1 Wellness Center 9
    - 5.1.2.2 OVK-IRA Tribal Lodge 10
  - 5.1.3 Projected Community Growth 10
  - 5.1.4 Estimated Fuel Consumption at Design 10
  - 5.1.5 Proposed Bulk Fuel Delivery 10
  - 5.1.6 Method and Frequency of Local Fuel Delivery 10
  - 5.1.7 Contingency Storage Needs 10
  - 5.1.8 Alternative Energy Sources 11
  - 5.1.9 Heat Recovery 11
  - 5.1.10 Wind and Hydroelectric Power Generation 11
  - 5.1.11 Geothermal 12
  - 5.1.12 Solar Photovoltaic Power 12
  - 5.1.13 Alternate Combustible Fuels 12
  - 5.1.14 Generator Efficiency Improvements 12
  - 5.1.15 Fuel Type Usage 12
- 5.2 RECOMMENDED STORAGE CAPACITY 13

6.0 FACILITY SITING AND DESIGN RECOMMENDATIONS 14
- 6.1 DESIGN CONSIDERATIONS 14

6.1.1 Climate 14
6.1.2 Natural Hazards 14
6.1.3 Geotechnical Conditions 14
6.1.4 Borrow Sources, Ownership, Material Costs 14
6.1.5 Local Labor Skills 14
6.1.6 Local Equipment 15
6.1.7 Access/ Logistical Challenges 15
6.1.8 Site Control 15
6.2 PROPOSED IMPROVEMENTS 16
6.2.1 Scope of Work 16
6.2.2 Non-Scope Items 16

7.0 PROPOSED OPERATING SCENARIO AND SPILL RESPONSE 17

8.0 PERMITTING 18
8.1 ENVIRONMENTAL ISSUES 18
8.2 SITE CONTAMINATION 18

9.0 CONSTRUCTION PLAN 19
9.1 ADMINISTRATION 19
9.2 CODES AND REGULATIONS 19
9.3 DECOMMISSIONING OF EXISTING TANKS 19
9.4 USE OF LOCAL LABOR 20
9.5 USE OF LOCAL EQUIPMENT 20
9.6 CONSTRUCTION SCHEDULE 20
9.7 CONCEPTUAL CONSTRUCTION COST ESTIMATE 22

10.0 STATEMENT OF COMPLIANCE WITH AND VARIATION FROM DENALI COMMISSION POLICIES 23

TABLES

Table 1 – Contact Information 4
Table 2 – Existing Tanks 5
Table 3 – Fuel Consumption and Delivery Schedule 9
Table 4 - Recommended Tank Farm Storage Capacity 13
Table 5 – Local Labor 15
Table 6 – Locally Available Heavy Equipment 15
Table 7 - Project Schedule 21

FIGURES

Figure 1 Vicinity Map
Figure 2 Community Site Plan

PHOTOGRAPHS

Photo 1 Existing Tanks and Dispensers
Photo 2 Typical Dispenser Arrangement and Fill/Draw Valves
Photo 3 Existing Wood Framed Structure

APPENDICES

Appendix A Site Visit Report
Appendix B Site Control/Permitting Documents
Appendix C Construction Cost Estimate
Appendix D Conceptual Design Drawings
Appendix E Alaska Energy Authority Training Program

ACRONYMS AND ABBREVIATIONS

ADEC	Alaska Department of Environmental Conservation
AEA	Alaska Energy Authority/Rural Energy Group
AP&T	Alaska Power and Telephone
API	American Petroleum Institute
AST	Aboveground Storage Tank
BFU	Bulk Fuel Upgrade
BOP	Business Operating Plan
CDR	Conceptual Design Report
CFR	Code of Federal Regulations
City	City of Kasaan
CRW	CRW Engineering Group, LLC
DC	Denali Commission
EA	Environmental Assessment
EPA	United Stated Environmental Protection Agency
FAA	Federal Aviation Administration
FONSI	Finding of No Significant Impact
HUD	United States Department of Housing and Urban Development
IBC	International Building Code (2003)
IFC	International Fire Code (2003)
IRA	Indian Reorganization Act
NEC	National Electrical Code (2002)
NEPA	National Environmental Policy Act
NFPA	National Fire Protection Association
O&M	Operation and Maintenance
OVK	Organized Village of Kasaan
PO	Primary Operator
R&R	Renewal and Replacement
SPCC	Spill Prevention, Control and Countermeasures Plan

UL	Underwriters Laboratory
USCG	United States Coast Guard
USDA	United States Department of Agriculture
USS	United States Survey
UST	Underground Storage Tank

1.0 PROGRAM OVERVIEW

The Alaska Energy Authority (AEA), Rural Energy Group is pursuing grant funds to upgrade bulk fuel tank farms in rural communities. The following bulleted items provide a brief outline of the program:

- Most of the funds for the bulk fuel upgrades program are federal in origin, and are provided through the Denali Commission. Other federal funding sources may include Community Development Block Grants from the US Department of Housing and Urban Development (HUD) and/or grants from the Environmental Protection Agency (EPA). Additional funds may be available from the State of Alaska, through the Department of Environmental Conservation and the Department of Education.
- In order to receive grant funds, each community must demonstrate that the proposed facility will be sustainable by accepting a Business Operating Plan (BOP). The function of the business plan is to establish ownership of the facility's components, and describe how each component will be operated, maintained and, eventually, replaced.
- New tank farms are funded, designed, and constructed in three phases: Phase 1-Conceptual Design; Phase 2-Final Design; and Phase 3-Construction.
- During Phase 1 staff from AEA will visit the community, discuss the program, and work with residents and the local government to select a site for the new tank farm. All planning and decisions concerning the conceptual design will be summarized in a Conceptual Design Report (CDR) and draft BOP.
- At the completion of Phase 1 the community will be requested to review and approve the CDR and draft BOP documents.
- During Phase 2 the design and permitting tasks for the new tank farm will be completed. Other Phase 2 tasks will include preparing an environmental assessment, gathering site control documents, and finalizing the BOP for signing.
- Each community will be asked to provide "in kind" contributions to the project such as land for the new tank farm and free use of local heavy equipment. If local equipment is utilized, the project grant funds will pay for fuel, maintenance, and any repairs during construction.
- Projects may include local hire and construction trade training programs, subject to funding.
- If construction funding is awarded then the project will advance to Phase 3, the final BOP will be sent to the community for signature, and a Construction Manager or Contractor will be selected to construct the project.

- Ineligible Project Components: Funding is not available through AEA for buildings, propane facilities, fuel tank trucks or trailers, under ground storage tanks, fuel to fill the tank farm, environmental remediation, operation & maintenance costs, or residential tank upgrades. Loans for fuel tank trucks and trailers may be available through the U.S. Department of Agriculture (USDA).
- Training is Available: AEA has several training programs available for facility operators and managers; see Appendix E for further information.

2.0 COMMUNITY OVERVIEW

Kasaan is located on the east side of Prince of Wales Island on the shore of Kasaan Bay, 30 air miles northwest of Ketchikan and 25 road miles from Thorne Bay. Local community organizations include the City of Kasaan (City), Kavilco Incorporated (Village Corporation), and the Organized Village of Kasaan (Village Council). Regional organizations include Southeast Island Schools (School District) and the Sealaska Corporation (regional Native Corporation).

The current population of Kasaan is approximately 60, (estimated by the Alaska State Demographer). Kasaan was traditionally a Haida village, but the population has become a mixture of Haida, Tlingit, Eskimos and other cultures.

Based on the 2000 Census, there are 39 total housing units in the community, including 22 vacant structures. The majority of homes are heated with oil stoves.

3.0 SITE VISITS AND COMMUNITY INVOLVEMENT

Representatives from AEA and CRW conducted a site visit on March 12, 2004. During the site visit AEA Project Manager Bryan Carey and CRW engineer Karl Hulse met with local leaders to discuss the Bulk Fuel Upgrade (BFU) Program policies and goals, and documented the community's current fuel storage and handling facilities.

3.1 PARTIES INTERESTED IN PARTICIPATION

The following list of project participants is based upon information obtained during the site visit and subsequent telephone conversations with community leaders. Each participant name is followed by a brief description of their project role.

City of Kasaan - Project grantee, owner and primary operator of proposed tank farm.

Kavilco Inc. - Owner of proposed site, will provide long term ground lease to City for new facilities.

3.2 CONTACTS

Critical project information was provided by the entities and contacts listed in Table 1.

Table 1 – Contact Information

Entity	Contact	Title	Address	Phone Number
City of Kasaan	Richard Peterson	Mayor	City of Kasaan P.O. Box KXA Kasaan, AK 99950	907-542-2212
Kavilco Incorporated	Louis Thompson	President and CEO	Kavilco Incorporated P.O. Box KXA Kasaan, AK 99950	907-542-2214
Organized Village of Kasaan (IRA Council)	Richard Peterson	President	Organized Village of Kasaan P.O. Box 26-Kasaan Ketchikan, AK 99950	907-542-2230

4.0 EXISTING FACILITIES

4.1 EXISTING BULK FUEL TANK FARMS

The community has one existing tank farm which is owned and operated by the City of Kasaan. The facility consists of two 5,000-gallon single wall horizontal AST's (one each diesel and gasoline). Both tanks are equipped with manholes, normal vents and gauge hatches. Neither tank has emergency vents. Dispensing is accomplished via transfer pumps, meters, filters and hose reels mounted on the end of each tank (Photos 1 and 2).

The tanks are situated in a 12-inch deep concrete containment basin measuring approximately 28-feet square. A wood framed structure with sheet metal siding on three sides encloses the entire facility (Photo 3). The open front of the structure provides access for filling and for operating the dispensing equipment. The facility does not include a truck transfer secondary containment area or provide adequate separation distances for code-compliant dispensing. The facility is operated and maintained by the City. The site is owned by the Village Corporation (Kavilco Inc.) and leased to the City.

Other known aboveground storage tanks (ASTs) currently in use in the community include three 400-gallon, single wall tanks (at the power plant, City Hall and Clinic), a 3,000-gallon tank at the School and a 200-gallon tank at the water plant. In addition, two abandoned 10,000 gallon single wall AST's sit approximately 15 linear feet northwest of the existing facility (Photo 4).

4.2 FUNCTION AND CAPACITY

The City's nominal gross bulk fuel storage capacity is approximately 10,000-gallons as shown in Table 2 below.

Table 2 – Existing Tanks

Tank Number and Current User	Diameter (inches)	Length (inches)	Style	Gasoline (Gallons Gross)	Diesel Fuel (Gallons Gross)
Tank Farm 1 – City of Kasaan					
1	92	170	Single Wall Horizontal		5,000
2	92	170	Single Wall Horizontal	5,000	
			Combined Tank Farm 1 Total	**10,000 Gallons**	

4.3 CURRENT OPERATION AND MAINTENANCE RESPONSIBILITIES

The City of Kasaan purchases diesel fuel and gasoline in bulk quantities. The fuel is stored at the existing tank farm, and is used for operating the standby power plant, heating the City office and other community buildings, and for retail sales purposes. Gasoline represents the majority of retail sales volume, as the majority of residents order heating oil from commercial vendors based in Thorne Bay.

Current bulk fuel system O&M requirements include:

- Manning the bulk fuel facility during truck delivery of diesel and gasoline (approximately 20 man hours per year).
- Manning retail sales dispensers during scheduled operating hours which currently are Monday, Wednesday and Friday from noon to 1:00 pm (approximately 160 man hours per year).
- Delivery of fuel to community building intermediate tanks via an existing City-owned fuel truck (approximately 100 man hours per year).
- Administrative duties including ordering fuel, billing customers, payroll, etc. (approximately 100 man hours per year).
- Facility maintenance including painting tanks, replacing valves, overall housekeeping, etc. (approximately 50 man hours per year).

4.4 EXISTING FUEL TRANSFER CAPABILITIES

The City owns a fuel tanker truck which is used to distribute fuel from the bulk tank farm to intermediate tanks at the power plant, and multiple public buildings. Reportedly, the largest compartment in the City's fuel truck is less than 2,000-gallons. The City's bulk tanks are fitted with 2-in diameter bottom penetrations used for bulk transfer (filling and drawing) and retail dispensing operations. A combination of check and isolation valves allows the operator to choose between fill and draw modes (Photo 2). Transfer pumps mounted to the tanks facilitate drawing whereas filling is accomplished via separate truck mounted pumps.

4.5 REGULATORY PLANS ON FILE

According to Mayor Richard Peterson, the City has no fuel system related regulatory plans on file.

4.6 EXISTING CONTAMINATION AND CITATIONS

The City has received no fuel citations to date. Further, a review of the Alaska Department of Environmental Conservation (ADEC) contaminated sites database revealed no known contaminated sites or leaking underground storage tanks (USTs) in Kasaan.

4.7 EQUIPMENT SUITABLE FOR REUSE

The existing horizontal tanks are reportedly over 20 years old and exhibit significant surface corrosion and pitting, especially along several welded bottom seams. Refurbishing the existing tanks would require inspection by an API certified technician, sand blasting and painting of the exterior surfaces, installing additional top penetrations to accommodate emergency vents, clock gauges, etc., and obtaining third party listing in order to comply with current state and federal codes. One of these tanks could be retained on site for use as a spill contingency storage tank. However without an API tank inspection, the integrity of the tanks can not be verified.

5.0 FUEL STORAGE RECOMMENDATIONS

5.1 STORAGE CAPACITY CONSIDERATIONS

The following sections include a summary of historical fuel usage in the community, and identify factors such as planned infrastructure improvements, alternative energy sources, and shifts in economic outlook that could affect future fuel consumption and storage needs.

5.1.1 Historical Fuel Use

Average annual fuel consumption in Kasaan was determined based on fuel delivery information provided by Petro Alaska Fuel Company and the City. Table 3 presents monthly fuel delivery records over the past two years.

Table 3 – Fuel Consumption and Delivery Schedule

Month	#1 Diesel (Gallons)	Gasoline (Gallons)
May-03	3835	
June-03		3900
July-03		
August-03		
September-03	500	
October-03	4026	4807
November-03		
December-03		
January-04	3764	
February-04		
March-04	3784	
April-04	2051	
May-04		1970
June-04		
July-04	1983	1967
August-04		2005
September-04	4361	4292
October-04		
November-04		
December-04	4422	
January-05		
February-05	4345	4133
March-05		
April-05		
May-05	2147	2204
Average Monthly Consumption	1,409	1,011
Approximate Annual Consumption	16,900	12,100

5.1.2 Planned Infrastructure Improvements

Future infrastructure improvement projects can affect community fuel consumption and should be considered in the design of a new bulk fuel facility. The scope and anticipated fuel consumption impact of planned infrastructure improvements are discussed in the following sections.

5.1.2.1 Wellness Center

According to the City, a new Wellness Center is proposed for Kasaan. The Center will be approximately 1600 square feet in size and consume about 2500-gallons of diesel fuel per year for heating purposes.

5.1.2.2 OVK-IRA Tribal Lodge

A Tribal Lodge building is currently planned for the community. It is assumed that this structure will be approximately 2,000 square feet in size and will consume approximately 3000-gallons of diesel fuel annually for heating purposes.

5.1.3 Projected Community Growth

The population of Kasaan has fluctuated between 25 and 60 residents over the past 50 years, and local leaders expect the population to continue to vary within this range for the foreseeable future. Since the City is connected to the Island's electrical grid, and most residents purchase their home heating fuel from outside the community, population dynamics are not expected to have much affect on fuel storage requirements in the design year.

5.1.4 Estimated Fuel Consumption at Design

The City's tank farm has a current annual throughput of approximately 29,000-gallons of fuel. Based upon the limited growth expectations of the community over the foreseeable future and its close proximity to the Island road and power grid systems, the current storage volume (10,000-gallons) should be sufficient to satisfy the needs of the community for the next ten years.

5.1.5 Proposed Bulk Fuel Delivery

After completion of the proposed facility fuel deliveries will continue to occur via tanker truck out of Thorne Bay on an as-needed basis.

The proposed bulk fuel transfer area will provide a code compliant method for transferring fuel between tanker trucks and the bulk tanks.

5.1.6 Method and Frequency of Local Fuel Delivery

After completion of the proposed facility, the City will continue to distribute fuel to the standby power plant and community buildings using its tanker truck. The majority of residents are expected to continue purchasing heating fuel from commercial fuel companies out of Thorne Bay. Retails fuel sales will occur at the proposed dual product dispenser to be located south of the new tank farm.

5.1.7 Contingency Storage Needs

Kasaan is connected to the Prince of Wales Island road system providing year round access to commercial fuel vendors in Thorne Bay and elsewhere. Winter conditions have isolated the community for short durations in the past, but the road into town has rarely been closed for more than a day or two. Further, the City is fed by the islands power grid which is operated and maintained by Alaska Power and Telephone Co.

(AP&T). Power outages are rare and, when problems do occur, the utility is equipped to respond quickly and effectively. For the purposes of this CDR, a worst case power outage duration of seven days has been assumed, resulting in a contingency storage requirement of approximately 1,000-gallons of diesel. With proper management (tracking fuel deliveries and placing fuel orders on a timely basis, etc.), the community's current bulk storage capacity should provide adequate flexibility to maintain the necessary contingency storage throughout the winter months for the next ten years.

5.1.8 Alternative Energy Sources

Diesel generators are typically considered the simplest and most reliable method of power production in rural communities. However, rising fuel costs and mounting regulatory concern over fuel spills and power plant emissions warrant a close evaluation of potential alternative energy sources. With proper planning, design and management, today's alternative energy technologies may be able to reduce the region's dependence upon fossil fuels in the future. Following are brief discussions of some fuel-saving technologies and the potential for their implementation in Kasaan.

5.1.9 Heat Recovery

Heat recovery technology, sometimes referred to as co-generation, provides a means of reclaiming energy lost to heat during the burning of fossil fuels. Co-generation systems in rural Alaska typically consist of a heat exchanger connected to the liquid cooling system of diesel generators in the community's power plant. The heat exchanger uses energy from the engine cooling system to supplement heat-reliant processes in adjacent buildings, such as pre-heating hydronic system return water to reduce boiler burn times, pre-heating raw well water to make treatment easier, etc.

Since Kasaan is connected to the island power grid its diesel plant is run only on occasion. Effective cogeneration systems rely on a continuous source of heat and, therefore, heat recovery in Kasaan is not feasible at this time.

5.1.10 Wind and Hydroelectric Power Generation

According to the Wind Energy Resource Atlas published by the U.S. Department of Energy, the Kasaan vicinity is designated as a Class 2 wind zone on a scale of 1 to 7. This designation indicates that the potential for beneficial use of wind as an energy resource in the region is low.

Small scale hydroelectric plants require adequate stream flow and head (elevation difference) to operate successfully, and are typically prohibited on fish bearing streams. The community is not aware of any studies to date which evaluate the feasibility of harnessing hydroelectric or wind energy in the Kasaan area and the community has no plans to conduct such a study at this time. Due to this no hydroelectric energy systems are anticipated in the foreseeable future

5.1.11 Geothermal

No known studies have been conducted to evaluate the feasibility of harnessing geothermal energy in the Kasaan area and the community has no plans to conduct such a study at this time. Given the lack of existing data and the relatively high exploration and development costs associated with this resource, no geothermal energy systems are anticipated in the foreseeable future.

5.1.12 Solar Photovoltaic Power

The typical solar energy system consists of multiple arrays of photovoltaic panels situated on top of buildings, towers or other relatively high structures. The fact that sunlight intensity varies from minute to minute due to changes in cloud cover, smoke from fires, blowing dust etc., requires that most solar-based systems have substantial battery storage. Due to the dramatic solar radiation fluctuations in northern latitudes and the practical limitations of storing and disposing of battery banks, solar systems are rarely capable of providing more than a minor amount of the total power necessary for a community. However, residential scale solar installations may be capable of meeting essential household electrical demands during the summer months.

5.1.13 Alternate Combustible Fuels

There are no known local sources of coal, natural gas, biomass or other alternative combustible fuels.

5.1.14 Generator Efficiency Improvements

Kasaan is connected to the island's power grid which is managed by AP&T. The existing generators in the community are used for emergency backup only; since these units are only in operation for short durations, upgrading the gensets would provide very little fuel savings. Replacing worn distribution system components and leveling the electrical loads throughout the community could reduce the community's overall electrical power consumption but would not affect the sizing of the City's bulk fuel facility. Therefore the potential fuel savings related to power generation/distribution system upgrades is not considered here.

5.1.15 Fuel Type Usage

The City currently stores #1 diesel since the majority of the fuel is used for oil fired heaters which are not designed for the more viscous #2 diesel. As a consequence the backup power plant, when needed, is run on #1 diesel. While switching to #2 diesel fuel would save some fuel, the City prefers burning #1 diesel in their plant in lieu of the extra cost and responsibilities associated with storing both #1 and #2 types.

5.2 RECOMMENDED STORAGE CAPACITY

The existing and proposed fuel storage capacities for the City are listed in Table 4. The recommended tank farm storage capacity is based upon the community's estimated fuel consumption at design (Section 5.1.4), and should provide the City with adequate storage for the next ten years. Additional details on the proposed facilities are provided in Section 6.2 and Appendix C.

Table 4 - Recommended Tank Farm Storage Capacity

Fuel Product	City of Kasaan	
	Existing	**Proposed**
Unleaded Gas	5,000	5,000
Diesel Fuel	5,000	5,000
Gross Storage	10,000	**10,000**
Net Storage [1]	9,000	**9,000**

Key: 1 – Net storage assumed to be 90% of gross.

6.0 FACILITY SITING AND DESIGN RECOMMENDATIONS

6.1 DESIGN CONSIDERATIONS

6.1.1 Climate

Kasaan is dominated by a cool, moist, maritime climate. Average summer temperatures range from 49ºF to 63ºF; winter temperatures average from 32ºF to 42ºF. Average annual precipitation is 120 inches, including 40 inches of snow.

6.1.2 Natural Hazards

Kasaan is located in Seismic Zone 2; earthquake danger in this region is moderate.

The potential for flooding at the proposed new tank farm site is low. A preliminary study by the Corps of Engineers established the 100-year flood level at approximately 20-feet above mean high tide. The facility will be located at approximately 50-feet above mean high tide.

6.1.3 Geotechnical Conditions

A detailed geotechnical investigation of the proposed site was not completed for this CDR; the proposed improvements will be constructed on an existing concrete slab foundation.

6.1.4 Borrow Sources, Ownership, Material Costs

Unprocessed “shot rock” is available from a local source owned by Sealaska Corporation. Pit run gravel is reportedly available from a borrow source in Klawock approximately 80 miles away from the site. There are no known local sources of gravel.

6.1.5 Local Labor Skills

A request was sent to the community for information regarding the availability of local labor to assist with construction of the proposed project. The results of the request are listed in Table 5.

Table 5 – Local Labor

Name of Individual	Laborer	Truck Driver	Operator	Mechanic	Welder's Helper	Certified Welder	Apprentice Electrician	Journeyman Electrician
Mike Escoffon	✓	✓	✓					
Mitch Denny	✓							
Charles Escoffon							✓	

6.1.6 Local Equipment

The City has agreed to make its heavy equipment available for the project. The type and condition of the equipment is listed in Table 6.

Table 6 – Locally Available Heavy Equipment

Equipment Type	Owner	Make	Model	Year	Attachments	General Condition
Excavator	City of Kasaan	Hitachi	EX220 LC-3	1994	--	Good

6.1.7 Access/ Logistical Challenges

Kasaan is connected via a 2-lane gravel road to the Prince of Wales Island road system and can be accessed by automobile, float plane and boat/barge. A State-owned seaplane base accommodates charter flights and air freight services from Ketchikan. There is a dock at the old cannery site and a small boat harbor.

6.1.8 Site Control

The proposed site is located at the existing City tank farm which occupies a portion of two U.S. surveys (U.S.S Numbers 280 and 1519). The site is owned by Kavilco Incorporated and, reportedly, leased to the City of Kasaan. The City was unable to produce a copy of the lease agreement and a title search did not reveal any recorded lease between the two entities. The project will require a new lease agreement between the City and Corporation for the proposed site.

Copies of the certificate to plat and a draft ground lease are included in Appendix B.

6.2 PROPOSED IMPROVEMENTS

6.2.1 Scope of Work

The proposed project scope of work includes the following upgrades:

- Installation of two new 5,000-gallon, protected, horizontal bulk storage/dispensing tanks, a new bulk fuel transfer area and a remote dual product dispenser. The new bulk tanks will be placed within the existing concrete containment area and the existing overhead enclosure will remain.
- Approximately 80 linear feet of dual 2-in schedule 80 welded steel pipelines between the bulk tanks and the dispenser.
- New electrical controls as required.
- EPA-required spill contingency equipment.
- Decommissioning of existing tanks replaced by the project (as funding permits).

6.2.2 Non-Scope Items

Non-Scope Items include system components that may be relevant to the project, but do not fall within the bounds of Denali Commission funding criteria. These components might have been discussed during the CDR phase of the project, and AEA might assist in identifying and pursuing alternative funding sources for them, but they will not be paid for under this project. Several non-scope items that might be relevant to the Kasaan project include:

- Rolling stock,
- Site remediation,
- Disposal of decommissioned tanks.

See Section 1.0 Program Overview for additional information on non-scope components.

7.0 PROPOSED OPERATING SCENARIO AND SPILL RESPONSE

The City of Kasaan, the Project Grantee, will act as the Primary Operator (PO) of the facility and will obtain a long term lease for the tank farm site from Kavilco Incorporated. The City will own all facility components, and will be financially responsible for the operation and maintenance costs.

The PO will oversee operation and maintenance of the facility, including training, testing, managing fuel delivery and retail sales, and other responsibilities as outlined in the project BOP.

Proposed new facilities will be subject to applicable EPA regulations. An Oil Spill Facility Response Plan will need to be prepared and submitted to both the USCG and the EPA. The facility will also require preparation of an SPCC plan. Spill response gear, including sorbent pads, protective safety gear, a fuel transfer pump, etc. will need to be purchased and stored on site. A 1,200-gallon spill contingency storage tank will also be required on site.

8.0 PERMITTING

Required state and federal permits should be identified early in the design phase. The following permit requirements are anticipated for this project:

- Preparation of an Environmental Assessment (EA) (see Section 8.1)
- Review by the Department of Natural Resources Coastal Zone Management Program
- Review by the Federal Aviation Administration (FAA)
- Review by the State Historic Preservation Officer
- State Fire Marshal Plan Approval – Note that the Fire Marshal has approved reuse of the existing overhead enclosure (see correspondence in Appendix B)
- USCG and EPA Regulatory Plan preparation

The project will be located within uplands so a 404 wetlands permit from the Department of the Army should not be required.

8.1 ENVIRONMENTAL ISSUES

In accordance with the National Environmental Policy Act (NEPA) an EA must be completed prior to construction of the project. The EA format should be based on the guidance documents provided in the AEA Reference Manual. The EA process should include the development and distribution of project-scoping letters to all interested agencies. Responses from the agencies should be attached to the EA as justification for a Finding of No Significant Impact (FONSI) for the project. AEA will act as the lead agency for FONSI determination.

8.2 SITE CONTAMINATION

The existing facility is built within a shallow concrete containment basin. It is unclear if the basin is liquid tight. Due to the current dispensing arrangement at the existing bulk tank facilities, the lack of any positive overfill prevention devices and the uncertainty of the performance of the containment basin, some contamination may exist in the vicinity of the existing tank farm. The extent of any contamination is unknown.

9.0 CONSTRUCTION PLAN

9.1 ADMINISTRATION

The AEA has a history of administering similar projects on a "modified" force-account basis. Force-account construction involves the owner or grantee acting as the employer and utilizing primarily local labor. This method tends to achieve a higher percentage of local hire and is strongly supported by many communities and funding agencies.

The technical nature of a tank farm project requires a limited number of workers with specific experience and expertise to be brought in for the project when not available locally. All work should be supervised and managed by a superintendent with extensive experience in the construction of rural fuel facilities. Skilled craftsmen, with appropriate certifications, must perform all specialty work, such as pipe welding and electrical panel installation. An experienced Construction Manager will be required to recruit the necessary skilled labor, coordinate the construction team, and oversee procurement and project logistics. The Design Engineer should assist the AEA project manager with quality control through communication with the construction manager and periodic on-site inspections.

9.2 CODES AND REGULATIONS

The proposed bulk fuel upgrades should be designed and constructed in accordance with the requirements of the following codes:

- - 2003 International Fire Code (IFC), including State of Alaska Amendments
- - 2003 International Building Code (IBC)
- - 2002 National Electrical Code (NEC)
- - 40 Code of Federal Regulations (CFR), Part 112.1-12, EPA Spill Prevention Requirements, including pending Revisions
- - The most recent Memorandum of Agreement between the AEA and the State Fire Marshal's office

The design should also incorporate appropriate industry standards such as those recognized by the National Fire Protection Association (NFPA), American Petroleum Institute (API), Underwriters Laboratory (UL) as well as proven methods and materials that have been used successfully on other rural bulk fuel facilities in similar locations and climates.

9.3 DECOMMISSIONING OF EXISTING TANKS

If funding permits, existing tanks replaced or taken out of service as a result of the project will be decommissioned (disconnected from existing piping and cleaned) but will not be disposed of. The decommissioned tanks will remain the property of the current

owners who will be responsible for their disposal. Any waste materials (hazardous or nonhazardous) removed from the tanks will be containerized and stored at a designated location as a part of the project. Pending the availability of TAPL funding, the containerized wastes will be transported and disposed of, but the tank owner (generator of the waste) will remain the responsible party and be required to sign all required transport and disposal paperwork.

9.4 USE OF LOCAL LABOR

The modified force account construction approach previously described in Section 9.1 will provide employment opportunities to the local labor force. The AEA Construction Manager will import skilled craftsmen, with appropriate certifications, to perform specialty work only (such as pipe welding and electrical panel installation). Other positions including laborers, equipment operators, etc. will be filled by locals whenever possible.

9.5 USE OF LOCAL EQUIPMENT

The City has agreed to donate its heavy equipment for use in the project (Table 6). Equipment maintenance, repair and fuel costs associated with the project will be paid out of the grant. If the construction manager plans to utilize the local equipment, an experienced fleet service mechanic should travel to Kasaan and go through the equipment with the local mechanics to ensure that it is in proper operating condition prior to construction. Supplemental equipment may be leased from local vendors in Craig, Ketchikan or other nearby communities.

9.6 CONSTRUCTION SCHEDULE

The construction schedule should take into account freight options and fuel delivery schedules. Further, the schedule should consider the affect of local subsistence activities on the availability of local labor.

The proposed project schedule, subject to availability of funding, calls for design and permitting during the winter of 2005, with construction beginning in the spring of 2006.

A tentative project schedule is shown on the following page.

Table 7 - Project Schedule

9.7 CONCEPTUAL CONSTRUCTION COST ESTIMATE

A conceptual cost estimate for the construction of proposed upgrades is included in Appendix C. The estimate includes labor, materials and shipping costs for all project components, and identifies unit costs for analysis of the project in regards to the Denali Commission's (DC) cost containment policies. Non-Scope items are not considered.

The cost estimate was developed based on the conceptual design drawings included in Appendix D, and the assumption that the project will be constructed using modified force account methodology previously described. Labor rates are based on Title 36 equivalent wages for general and certified specialty labor. The total project cost, including all design, supervision, construction, inspection, permitting, insurance, and a 20 percent contingency, is estimated as $629,000 or $62.90 per gallon based upon a gross storage capacity of 10,000-gallons.

10.0 STATEMENT OF COMPLIANCE WITH AND VARIATION FROM DENALI COMMISSION POLICIES

This section compares the findings and recommendations of this CDR with applicable DC Policies for fuel pipeline and dispenser design, system sustainability, cost containment criteria, effects to private enterprise, and design capacity.

Fuel Pipeline and Dispenser *Design* Standards

The conceptual design meets the standards established in the DC *Policy on Bulk Fuel Pipelines and Dispensers*, issued April 26, 2002.

System Sustainability

The recommendations in this CDR comply with all sustainability criteria established in the DC's *Policy for Rural Alaska Energy Infrastructure – Criteria for Sustainability* issued in April 2002.

Cost Containment

This CDR recommends a gross storage capacity of 10,000-gallons; all of this storage will be located at the proposed tank farm facility. The estimated cost to construct the project is $62.90 per gallon. Based on the DC's benchmark unit costs of $14.00 to $18.00 per gallon for facilities with 0 to 50,000 gallons of storage, the project exceeds cost containment by $44.90 per gallon. The scale of this project is small, in terms of gross storage capacity, yet many of the design, construction management and material costs are fixed. This circumstance tends to inflate the per gallon project cost. Additional storage could be provided at a relatively low incremental construction cost increase, thereby lowering the per gallon construction costs. However, storage in excess of that recommended would provide no additional benefit. Instead, excess storage would burden the City with additional O&M and future R&R expenses.

Private Enterprise Policy

The recommendations in this CDR comply with all standards established under the DC's *Draft Private Enterprise Policy* issued in January 2001.

Design Capacity Policy

The planned storage capacity complies with the Denali Commissions Policy on Energy Project Design Capacity (no more than 13 months storage), and meets the 20% capacity increase benchmark stated in the DC's Cost Containment Policy.

FIGURES AND PHOTOS

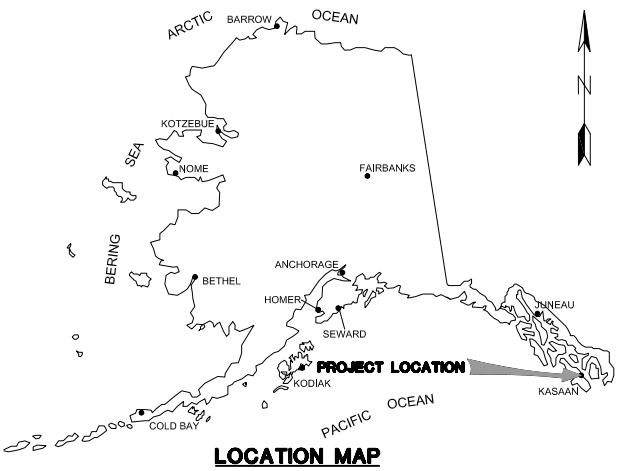

LOCATION MAP

1 / FIG1 **VICINITY MAP**

APPROXIMATE SCALE 1" = 3 MILES

CRW ENGINEERING GROUP, LLC Project:	State of Alaska Department of Community and Economic Development AIDEA/AEA Rural Energy Group 813 West Northern Lights Blvd. Anchorage, Alaska 99503 ALASKA ENERGY AUTHORITY	KASAAN BULK FUEL UPGRADES VICINITY MAP	Project No: 30401.19 Drawn By: SOK Scale: AS SHOWN Date: 5/05 Figure: 1

FILE NAME:

Photo 1 – Existing Tanks and Dispensers

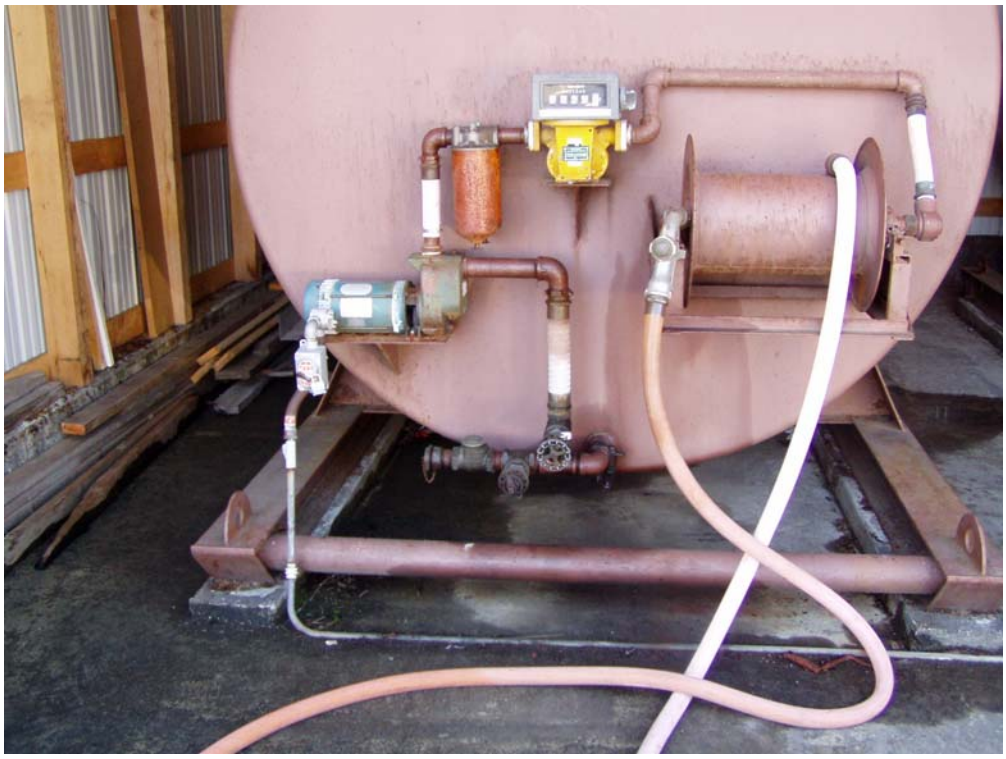
Photo 2 – Typical Dispenser Arrangement and Fill/Draw Selector Valves

Photo 3 – Existing Tank Enclosure

APPENDIX A
SITE VISIT REPORT

TRIP REPORT

CRW Engineering Group
3900 Arctic Blvd. Suite 203
Anchorage, AK 99503
PH (907) 562-3252 FAX 561-2273

DATE: March 10, 2004

PROJECT: Kasaan BFU – CRW 30401.19

LOCATION: Kasaan, Alaska

REPORTER: Karl Hulse

PURPOSE: Site Reconnaissance

CONTACTS

Entity	Contact	Address	Phone Number
City of Kasaan	Richard Peterson, (Mayor)	City of Kasaan P.O. Box KXA, Kasaan, AK 99950	907- 542-2212
Kavilco Inc.	Louis Thompson, (President and CEO)	Kavilco Incorporated. P.O. Box KXA Kasaan, AK 99950	907-542-2214
Organized Village of Kasaan (IRA Council)	Richard Peterson (President)	Organized Village of Kasaan P.O. Box 26-Kasaan Kasaan, AK 99950	907- 542-2230

ACTIVITIES:

Representatives from CRW Engineering Group, LLC (CRW) and AEA conducted a site visit on March 10, 2003. Site visit personnel included AEA Project Manager Bryan Carey and CRW engineer Karl Hulse. The following tasks were completed during the site visit

- Examined existing tanks to determine their suitability for reuse.
- Documented existing buried and above grade fuel lines.
- Interviewed City maintenance personnel regarding current bulk and residential fuel delivery schedules, dispensing practices, existing system deficiencies, etc.
- Photographed and created as-built sketches of pertinent fuel tanks and piping systems.

March 10-

The site visit crew arrived in Kasaan at approximately 11:00 a.m. via rented vehicle out of Craig. Bryan and Karl met with the Mayor Ricky Peterson and then proceeded to the bulk tank farm site to examine the existing tanks. A community maintenance worker assisted the site visit by showing us around the community.

The site visit crew departed at approximately 3:30 pm en-route to Thorne Bay.

APPENDIX B
SITE CONTROL/PERMITTING DOCUMENTS

Site Control Opinion
Bulk Fuel System Upgrade Project
Kasaan, Alaska

As requested, I have reviewed the land status for the proposed bulk fuel system upgrade project in Kasaan, Alaska.

Land Status Report
Land records were researched at the Bureau of Land Management (BLM), the State Department of Commerce and Economic Development, and the State Recording Office. Research of the BLM and the State Recording Office information was conducted on line. A certificate to plat report dated July 1, 2005, prepared by Alaska Escrow and Title Insurance Agency, Inc. was also reviewed. A copy of the report is attached.

The proposed site is located within U.S Surveys No. 280 and 1519 located with Township 73 South, Range 86 East, Copper River Meridian. Title to these parcels was transferred to the Kavilco, Inc. by Univar Corporation. The deed was recorded on June 9, 1975, at Book 55, Page 874, in the Ketchikan Recording District. A copy of the recorded deed is included in the certificate to plat referenced above.

Leases and Easements. The general project area is also subject to a lease to Tlingit-Haida Regional Electrical Authority (THREA) and easements to the THREA as identified in the certificate to plat report referenced above. The lease was assigned to the Alaska Power Company in 2001. A copy of the assignment is also included in the above referenced certificate to plat.

Site Control Summary. Project area appears to be owned by Kavilco, Incorporated. The exact location of the THREA lease and easements cannot be conclusively determined but should be checked on the ground to avoid any conflicts. Kavlico should issue a long-term lease to the City of Kasaan to establish site control for this project.

Disclaimer: This site control opinion does not purport to insure, warrant or certify title. This opinion is not a legal opinion. The research of the Ketchikan Recorders Office records was limited to a review of the computerized files. The opinion is the result of a diligent research effort as described above.

Prepared by

Rick Elliott

Rick Elliott
Land Consultant for CRW
July 6, 2005

Attachment: Certificate to plat

ALASKA ESCROW AND TITLE INSURANCE AGENCY, INC.
2030 SEA LEVEL DRIVE, STE. 201
PO BOX 5040
KETCHIKAN, ALASKA 99901
TEL: (907) 225-9077 **FAX:** (907) 225-9076

CERTIFICATE TO PLAT

Rick Elliott
5452 Cape Seville Drive
Anchorage, AK 99516
ATTENTION: Rick Elliot

Reference No.: 30401.14
File No.: 34037
Premium: $250.00
Tax: $15.00

This report is restricted to the use of the addressee and is not to be used as a basis for closing any transaction affecting title to said property. Liability of the Agency is limited to the compensation received therefore.

This is a certificate as of June 14, 2005 at 8:00 A.M. for a plat out of the following property:

See Exhibit 'A' attached hereto and made a part hereof.

This Company certifies that record title is vested in:

Kavilco Incorporated, an estate in fee simple.

SUBJECT TO:

1. Taxes and/or assessments, if any.
2. Any facts, rights, interests or claims which are not shown by the public records but which could be ascertained by an inspection of the land or by making inquiry of persons in possession thereof.
3. Easements, liens or encumbrances, or claims thereof, which are not shown by the public records.
4. Discrepancies, conflicts in boundary lines, shortage in area, encroachments, or any other facts which a correct survey would disclose, and which are not shown by the public records.
5. (a) Unpatented mining claims; (b) reservations or exceptions in patents or in Acts authorizing the issuance thereof (c) water rights; claims or title to water.

(Continued to next page)

6. Any right, title, interest, estate or easement in land beyond the lines of the area specifically described or referred to in this report, or in abutting streets, roads, avenues, alleys, lanes, ways or waterways, but nothing in this paragraph shall modify or limit the extent to which the ordinary right of an abutting owner for access to a physically open street or highway is insured by this policy.

7. Any law ordinance or governmental regulation (including but not limited to building and zoning ordinances) restricting or regulating or prohibiting the occupancy, use or enjoyment of the land, or regulating the character, dimensions or location of any improvement now or hereafter erected on the land, or prohibiting a separation in ownership or a reduction in the dimensions or area of the land, or the effect of any violation of any such law, ordinance or governmental regulation.

8. Rights of eminent domain or governmental rights of police power unless notice of the exercise of such rights appears in the public records.

9. Defects, liens, encumbrances, adverse claims, or other matters, (a) created, suffered, assumed or agreed to by the insured claimant; (b) not shown by the pubic records and not otherwise excluded from coverage but known to the insured claimant either at Date of Policy or at the date such claimant acquired an estate or interest insured by this policy or acquired the insured mortgage and not disclosed in writing by the insured claimant to the Company prior to the date such insured claimant became an insured hereunder; (c) resulting in no loss or damage to the insured claimant; (d) attaching or created subsequent to Date of Policy; or (e) resulting in loss or damage which would not have been sustained if the insured claimant had been a purchaser or encumbrance for value without knowledge.

10. Reservations and exceptions as contained in the U.S. Patent and acts relating thereto.

11. Reservations contained in Deed recorded June 3, 1975 in Book 55 at Page 874, a copy of which is attached.

12. Lease, and the terms and conditions thereof:

LESSOR:	Kavilco, Inc,. a village profit corporation
LESSEE:	Tlingit-Haida Regional Electrical Authority
DATED:	November 19, 1976
RECORDED:	December 7, 1976 in Book 64 at Page 90

Including but not limited to the requirement that the Lessor consent to any assignment, sale, transfer or encumbrance of said leasehold.

Amended Lease of real property and the terms and conditions thereof recorded February 22, 1977 in Book 65 at Page 281.

Second Amended Lease, easement of real property, and the terms and conditions thereof recorded December 22, 1997 in Book 278 at Page 818.

Lessee's interest in said Lease assigned to: Alaska Power Company

BY ASSIGNMENT
RECORDED: December 31, 2001 in Book 337 at Page 445

(Continued on next page)

13. Easement and the terms and conditions thereof:

GRANTEE:	Tlingit-Haida Regional Electrical Authority
PURPOSE:	operation, maintenance or repair of fuel pipeline system
AREA AFFECTED:	Pipeline No. 1: All that parcel of land; 10.00 feet wide, centered on an existing 3 inch diameter pipeline; lying entirely within U.S.S. 280, near Kasaan, Alaska; described as follows: To find a place of beginning, commence at WCMC2, a 3" brass cap on a 2 ½" galvanized iron pipe; Thence N. 14° 29' 54" E, a distance of 546.16 feet, to a point for the place of beginning, on the SE boundary of the parcel. From the aforementioned place of beginning, on the existing pipeline, thence N. 70° 25' 56" W, along the centerline of the parcel, a distance of 138.03 feet to a point: thence N. 64° 44' 06" W, along the centerline of the parcel, a distance of 62.14 feet to a point; thence N. 0° 37' 28" E, along the centerline of the parcel, a distance of 171.35 feet to a point; thence S. 88° 30' 23" W, along the centerline of the parcel, a distance of 47.97 feet to a point on the NW boundary of the parcel. AND Pipeline No. 2: All that parcel of land; 10.00 feet wide, centered on an existing 2 inch diameter pipeline; in U.S.S. 280 and U.S.S. 1519 near Kasaan, Alaska; described as follows: To find the place of beginning, commence at WCMC2, a 3" brass cap on a 2 ½" galvanized iron pipe; Thence N. 6° 27' 08" E, a distance of 307.71 feet, to a point for the place of beginning, on the SW boundary of the parcel. From the aforementioned place of beginning, on the existing pipeline, thence N. 17° 18' 20" W, along the centerline of the parcel, a distance of 3.27 feet, to a point: thence N. 76° 11' 48" E, along the centerline of the parcel, a distance of 6.62 feet to a point; thence N. 36° 17' 15" E, along the centerline of the parcel, a distance of 71.87 feet, to a point; thence N. 10° 44' 49" E, along the centerline of the parcel, a distance of 63.25 feet, to a point; thence N. 62° 07' 14" E, along the centerline of the parcel, a distance of 79.36 feet, to a point; thence N. 7° 19' 59" E, along the centerline of the parcel, a distance of 49.47 feet to a point; thence N. 86° 42' 42" W, along the centerline of the parcel, a distance of 3.30 feet, to a point on the NE boundary of the parcel.
DATED:	October 19, 1994
RECORDED: (COPY ATTACHED)	December 22, 1997 in Book 278 at Page 818

(Continued on next page)

14. Subject to unrecorded Easement and the terms and conditions thereof granted by City of Kasaan to Tlingit-Haida R.E.A. as disclosed by instrument recorded December 22, 1997 in Book 278 at Page 818.

15. No search has been made for matters that would encumber the interest of Alaska Power Company as disclosed by Second Amended Lease/ Easement of Real Property recorded December 22, 1997 in Book 278 at Page 818.

16. Right, title and interest of the City of Kasaan as disclosed by application for Certificate to Plat.

17. Showing of authority of the officers executing the proposed instrument on behalf of the herein named corporation must be submitted.
    Corporation: Kavilco Incorporated
    NOTE: Failure to submit such copy will prevent us from recording.

Alaska Escrow and Title Insurance Agency, Inc.

By:
Alicia Sturgess
Authorized Signator

EXHIBIT "A"

That portion of U.S. Surveys No. 280 and 1519 located in T 73 S, R 86 E, CRM, Alaska further described as follows: Beginning at a brass cap monument, grouted in a 4" iron pipe, marked "ATS 106 C 2 WC MC", said monument lying 17.97' S 31°28' W from Corner No. 2 MC, USS 1519 and 34.83' N 31°28' E of Corner No. 2 MC, ATS 106, Thence N 20°04'33" E, 459.21' to Corner No. 1, the True Point of Beginning, a 5/8" rebar; Thence N 7°09'20" E, 76.59' to Corner No. 2, a 5/8" rebar; Thence N 82°50'40" W, 36.50' to corner No. 3, a 5/8" rebar; thence S 7°09'20" W 76.59' to corner No. 4, a 5/8" rebar; Thence S 82°50'40" E, 36.50' to corner No. 1, the true point of beginning. The above described parcel contains and area of 2,796 square feet. In addition to the above described parcel exists an easement 10' wide, centered on a pipeline that runs from the fuel facility to the road along the beach as follows: From corner No. 3, described above, S 82°50'40" E, 3.6' to the actual pipeline; Thence N 5°02' E, 18.6' to an angle in the pipeline; Thence N 68°49' W, 208.8' to the roadway. Records of the Ketchikan Recording District, First Judicial District, State of Alaska.

550874

BOOK 55 PAGE 874
Ketchikan Recording District

SPECIAL WARRANTY DEED

FOR VALUE RECEIVED, the Grantor, UNIVAR CORPORATION, a Delaware corporation, (whose corporate name was formerly VWR United Corporation, successor by merger to Pacific American Corporation, whose corporate name was formerly Pacific American Fisheries, Inc. and is sometimes shown of record as Pacific American Fisheries or Pacific American Fisheries, Incorporated), does hereby grant, convey and quitclaim to KAVILCO INCORPORATED, Route 1, Box 704, Ketchikan, Alaska 99901, all interest which the Grantor has in properties located on Kasaan Bay, Prince of Wales Island, State of Alaska which are described with particularity on Exhibit A hereto attached and by this reference incorporated into this Deed.

Including any after acquired title of the Grantor to any and all of the said properties,

BUT RESERVING HOWEVER, to the Grantor, its successors and assigns forever, all iron, natural gas, coal, oil and minerals of any nature whatsoever, other than sand and gravel, upon or in said lands, together with the full, exclusive and perpetual right to explore for, remove and dispose of the same by any means or methods suitable to the Grantor, its successors and assigns, but so as not to damage the surface of said lands or any building or improvements thereon or interfere with the use thereof without payment to the owner of any damages caused by such entry and removal.

With respect to the property hereby conveyed, the Grantor warrants that the same is not encumbered for debt of the Grantor and also warrants its title thereto, its right to sell the same, and that the said property has not been conveyed by the Grantor to any other party.

The warranties of this conveyance are limited to those herein expressed, and all other warranties, express, implied or statutory,

550875

BOOK 55 PAGE 875
Ketchikan Recording District

are excluded. All property is conveyed and transferred "as is", and no representation or warranty is or has been made as to size, condition of improvements, fitness for purpose intended, rights of persons in possession, if any, state of repair, or otherwise.

IN WITNESS WHEREOF, the Grantor has caused this instrument to be executed the 25th day of April, 1975.

CORPORATE SEAL 1966 DELAWARE

UNIVAR CORPORATION

By [signature]
Sr. Vice President

And by [signature]
Secretary

STATE OF WASHINGTON)
) ss.
COUNTY OF KING)

On this 25th day of April, 1975, before me, the undersigned, a Notary Public in and for the State of Washington, duly commissioned and sworn, personally appeared Y. Stewart Lewis and Harry Jensen, to me known to be the President and Secretary, respectively, of UNIVAR CORPORATION, the corporation that executed the foregoing instrument, and acknowledged the said instrument to be the free and voluntary act and deed of said corporation, for the uses and purposes therein mentioned, and on oath stated that they were authorized to execute the said instrument and that the seal affixed is the corporate seal of said corporation.

WITNESS my hand and official seal hereto affixed the day and year in this certificate above written.

Edyth Freeman
Notary Public in and for the State of Washington, residing at Seattle.

Survey No.	Acres	Patent No.	Description
280	21.[illegible]	25663	KETCHIKAN DISTRICT For the lands embraced in U. S. Survey 280, situated on the Prince of Wales Island, on the north side of Kasaan Bay, Ketchikan Recording District, Alaska, more particularly bounded and described as follows, with magnetic variation 28 degrees 45 minutes east: BEGINNING at corner No. 1, a diorite stone 24 x 12 x 6 inches, marked S. No. 280, Beg. Corner No. 1, with cross on top at corner point with mound of stone, from which U. S. Initial Monument No. 5 bears south 25 degrees 14' west, 17.4852 chains distant; Thence north 47 degrees 30' east, 5.50 chains to corner No. 2, a diorite st stone 26 x 12 x 8 inches, marked S. No. 280, Corn. No. 2, with cross on top at corner point with mound of stone; Thence south 72 degrees 9' east, 3.3094 chains to corner No. 3, a diorite stone 24 x 12 x 6 inches, marked S. No. 280, Cor. No. 3, with cross on top at corner point with mound of stone; Thence south 42 degrees 30' east, 27.45 chains to corner No. 4, a diorite Stone 24 x 12 x 6 inches, marked S. No. 280, Cor. 4, with cross top (on top) at corner point with mound of stone; Thence south 47 degrees 30' west, 10.20 chains to witness corner to corner No. 5 a granite stone 24 x 12 x 6 inches, marked W. C. S. No. 280, Cor. No. 5, with cross on top at corner point with mound of stone, 10.60 chains to corner No. 5, under cannery building (and not established); 145 links from north end of which set a granite stone 26 x 12 x 8 inches, marked M. C. S. No. 280, Cor. No. 5 for meander corner; Thence along the meanders of the beach as follows: North 24 deg. west, 4:60 chains; thence north 1 degree 15' west, 4.80 chains; thence north 24 degrees west, 5.60 chains; thence north 78 degrees 30' west, 4.9999 chains to corner No. 6, a granite boulder 24 x 12 x 8 inches, marked M. C. S. No. 280, Cor. No. 6, with mound of stone; thence north 42 degrees 30' west, .50 chains to witness corner to corner No. 6, a granite boulder 24 x 12 x 6 inches, marked W. C. S. No. 280, Cor. No. 6, with cross on top at corner point with mound of stone; 13 chains to corner N . 1, the place of beginning, containing twenty-one and seven hundred eight ten-thousandths acres.

DEED
Univar Corporation to
Kavilco Incorporated.

550877

55 871

Survey No.	Acres	Patent No.	Description
			KETCHIKAN DISTRICT
1519	1.83	1009169	A tract of land embraced in U. S. Official Survey No. 1519, situated on the east shore of Kasaan Bay, Prince of Wales Island, Territory of Alaska, adjoining the land embraced in U. S. Survey No. 280, and situated in Latitude 55 degrees 32' 04" North and Longitude 132 degrees 23' 43" West, and particularly described as follows: BEGINNING at corner No. 1 M. C. on the East shore of Kasaan Bay at the line of M. H. T., identical with Corner No. 5 M. C. of U. S. Survey No. 280, from which U. S. I. M. No. 5 bears North 69 degrees 51' 08" West 26.45 chains distant; thence by meanders along the east shore of Kasaan Bay at line of M. H. T. as follows: (1) South 23 degrees 20' East 206 chains; (2) South 5 degrees 45' East 2.04 chains to corner No. 2; thence North 31 degrees 28' East along Southeast boundary of this tract 13.00 chains to corner No. 3 identical with corner No. 4 of U. S. Survey No. 280; thence South 47 degrees 30' West 10.60 chains, to corner No. 1, the place of beginning, containing an area of 1.83 acres.

DEED
Univar Corporation to
Kavilco Incorporated

Survey No.	Acres	Patent No.	Description
			KETCHIKAN DISTRICT
106	14.365	52	Alaska Tideland Survey No. 106, containing 14.365 acres on the northwest shore of Kasaan Bay, Prince of Wales Island, Alaska, conveyed to Pacific American Corporation by Alaska State Tideland Patent No. 52, recorded in Volume 15, of Deeds at Page 209-210 of the Ketchikan Recording District, as Instrument No. 63-113, on the 23rd day of January, 1963, described with particularity as follows:

A parcel of tide and submerged land containing 14.365 acres, more or less, as designated on the official plat thereof, known as Alaska Tideland Survey No. 106 (OR 735 852), and more properly described as follows: Beginning at Meander Corner No. 1 of this description, identical with the original (1900) position of Meander Corner No. 6 of U.S. Survey No. 280, at the line of mean high tide on the northwest shore of Kasaan Bay, Prince of Wales Island, Southeastern Alaska; thence meandering the present (1961) line of mean high tide in front of U.S. Survey No. 280 as follows: (1) S. 88°16' E., 274.25 ft.; (2) S. 62°32' E., 111.00 ft.; (3) S. 6°59' E., 139.96 ft.; (4) S. 25°38' E., 233.00 ft.; (5) S. 4°00' E., 195.00 ft.; (6) S. 6°37' W., 142.00 ft.; (7) S. 16°43' E., 271.46 ft. to an intersection with original (1900) Meander Course No. 5 of said Survey No. 280; thence S. 24°00' E., 19.03 ft. along said Meander Course No. 5 to the original (1900) position of Meander Corner No. 5 of U.S. Survey No. 280, identical with the original (1924) position of Meander Corner No. 1 of U.S. Survey No. 1519; thence along the original (1924) Meander Courses in front of U.S. Survey No. 1519 as follows: (1) S. 23°20' E., 135.96 ft.; (2) S. 5°45' E., 25.27 ft. to an intersection with the present (1961) line of mean high tide; thence along the present (1961) Meander Courses in front of U.S. Survey No. 1519 as follows: (3) S. 21°22' E., 39.26 ft.; (9) S. 28°07' W., 15.51 ft. to an intersection with original (1924) Meander Course No. 2; thence S. 5°45' E., 57.22 ft. along said Meander Course No. 2 to the original (1924) position of Meander Corner No. 2 of U.S. Survey No. 1519; thence S. 31°25' W., 52.80 ft. over uplands to Meander Corner No. 2 of this description at the present (1961) position of Meander Corner No. 2 of U.S. Survey No. 1519; thence S. 72°34' W., 400.00 ft. outboard over tide and submerged lands to Corner 3 of this description; thence N. 17°26' W., 775.30 ft. over submerged lands to Corner No. 4 of this description; thence N. 0°05' E., 699.28 ft. over submerged and tidelands to the point of beginning.

BOOK 64 PAGE 90
Ketchikan Recording District

LEASE OF REAL PROPERTY

THIS AGREEMENT, made this 19th day of NOVEMBER, 1976, by and between the Kavilco, Inc. a Village profit Corporation organized under the Alaska Native Settlement Claims Act and the laws of the State of Alaska (hereinafter referred to as "Lessor") and Tlingit-Haida Regional Electrical Authority, a public body corporate and politic and a political subdivision of the State, organized and existing pursuant to AS 13.57 and AS 10.20 (hereinafter referred to as "Lessee"),

WITNESSETH:

1. Premises:

Lessor, for and in consideration of the rents, covenants, and conditions hereinafter specified to be paid, performed, and observed by Lessee, does hereby let, lease, and demise to Lessee certain improved real property located in the City of Kasaan, Ketchikan Recording District, First Judicial District, State of Alaska, which improved real property consists of a certain tract of land together with any buildings, structures, improvements, fixtures and equipment thereon utilized in the production and distribution of electrical power, which improved real property is more particularly described as follows:

That certain unsubdivided portion of Lot 1, Kasaan Indian Village, U.S. Survey No. 1519, more particularly described as follows:

Beginning at C2WC of U.S.Survey No.1519,marked with a 3" brass cap, grouted into a cement filled,2½" galvanized pipe as shown on the official plat of Alaska Tideland Survey No.106,thence N 12°12'E a distance of 268.65 feet to the true point of beginning of the portion herein described;thence N 13°48'W a distance of 50.00 feet; thence S 76°12'W a distance of 50.00 feet;thence S 13°48'E a distance of 50.00 feet;thence N 76°12'E a distance of 50.00 feet,back to pob containing an area of 2,500 square feet,more or less.

TOGETHER WITH, all and singular, the tenaments, hereditaments, and appurtenances thereunto belonging or in anywise appertaining.

1. The above-described real property is hereinafter referred to as the "premises".

2. Purposes:

(a) Lessee shall utilize the demised premises for the production and distribution of electrical power for the term of this Lease, including any extensions hereof, and may conduct any additional related services or activities as Lessee in its own discretion may deem meet in the circumstances.

3. Encumbrances:

The premises are leased, subject to deed restrictions, easements, rights of way, if any, zoning and building restrictions, and governmental regulations, if any, now in effect or hereafter adopted by any governmental authority.

4. Term:

(a) The term of this Lease shall be ~~ninety-nine (99)~~ Forty-five (45) years commencing October 1, 1976, through and including September 30, 2075, subject to the option to extend hereinafter granted.

~~(b) The term of this Lease may be extended at the option of Lessee for two additional terms of thirty-five (35) years each upon the same terms and conditions~~

~~contained in this Lease. Thereafter, the term may be extended or renewed, as the case may be, for additional thirty-five year terms upon agreement by both parties hereto. Lessee shall give Lessor at least one year's written notice in the event Lessee elects to extend the Lease pursuant to the foregoing provisions~~.

5. Rental:

Tenant hereby agrees to pay on the first day of each calendar year during the term of this Lease, and any extensions hereof, a yearly rental of one dollar ($1.00). This rental is in addition to any other amounts or obligations which Lessee has agreed to pay, assume or perform, as are more particularly described below.

6. Taxes and Other Charges:

(a) If and to the extent Lessee is not exempt from taxes, assessments, permits, inspection and license fees, and other public charges, whether of a like or different nature, levied upon or assessed against the leased premises and any buildings, structures, fixtures, or improvements now or hereafter located thereon, or arising in respect to the occupancy, use or possession of the leased premises, and which are assessed and are, or become a lien during the term of this Lease, or any extensions hereof, Lessee agrees to exhibit to Lessor, on demand, receipts evidencing payment of all taxes, assessments, and public charges so payable by Lessee.

(b) It is expressly agreed that Lessee shall not be obligated to pay any income tax, profits tax, excise tax, or other tax or charge that may be payable by or chargable to Lessor, under any present or future law of the United States or the State of Alaska, or imposed by any political or taxing subdivision thereof, or any other governmental agency, upon or with respect to the rent or other consideration received by Lessor under this Lease. It is further expressly agreed that Lessee shall not be obligated to pay any transfer, succession, or other similar tax or charge that may be payable under any present or future law of the United States or the State of Alaska, or imposed by any political or taxing subdivision thereof, or any any other governmental agency, by reason of the devolution, succession, transfer, or passing by acquisition or otherwise, of all or any part of Lessor's interests in the premises leased hereunder.

(c) In the event any assessment is levied on the premises for a part of the cost of any public work or improvement assessed according to benefit found by the levying authority to accrue therefrom to the leased premises and the option is given to pay such assessment in installments, Lessee may elect to pay the same in installments and in that case shall be liable only for such installments as shall accrue during the term of this Lease or any extensions thereof. Lessee shall also pay all charges for water, gas, electricity, sewer, or other public utility services rendered during the term of this Lease as such charges become due.

7. Compliance with Law:

Lessee shall comply with all applicable laws, ordinances, and regulations of duly constituted public authorities now or hereafter in any manner affecting the leased premises, or the sidewalks, alleys, streets, and ways adjacent thereto, or any buildings, structures, fixtures, or improvements or the use thereof, whether or not any such laws, ordinances, or regulations which may be hereafter enacted involve a change of policy on the part of the governmental body enacting the same.

8. Care of Premises:

Except and to the extent of rights granted pursuant to Section 12 below, Lessee, at its own cost and expense, shall keep the leased premises, and all buildings, structures, improvements, fixtures, and equipment, which at any time during the term of this Lease or any extensions thereof may be situated or located thereon, and any and all appurtenances thereunto belonging, in good condition and repair, reasonable wear and tear excepted.

9. No Liens Permitted:

(a) With the exception of liens encumbrances, mortgages, or other security instruments which may be required by the Rural Electrification Administration, or by any other federal, state or local governing body or private entity extending loans or credit in respect to the repair, replacement, maintenance, or improvement of electrical facilities and appurtenant buildings, structures, improvements, fixtures, and equipment in respect to the leased premises, Lessee shall not create or permit any lien or encumbrance on the premises which would in any way cloud or jeopardize Lessor's right, title, and interest in and to the premises, or any portion thereof. Lessor retains all statutory rights to post the premises and each and every portion thereof with notices of non-responsibility for liens. Upon expiration of this lease or any extensions thereof, Lessee shall return the leased premises to Lessor free and clear of any liens, encumbrances, mortgages or other security interests, if any.

10. Lessee's Right to Alter, Improve, or Substitute Buildings, Structures, Improvements, Fixtures, and Equipment:

(a) Lessee, when not in default of performance of any of its obligations hereunder, shall have the following rights, during the term of this Lease and any extensions hereof, from time to time, in such manner and to such extent that Lessee may in its judgment deem advisable:

(1) To demolish, remove, or otherwise dispose of any buildings, structures, improvements, fixtures, and equipment presently or subsequently situated upon the demised premises. Upon such removal, such improvements shall be the sole property of the Lessee with the right to dispose of such improvements in any way it should deem advisable.

(2) To erect, place, or install upon the leased premises structures, buildings, improvements, fixtures, and equipment, as from time to time Lessee in its judgment shall deem advisable.

(3) To make such alterations, additions, and repairs to the leased premises as it may desire.

(b) All improvements, including but not limited to buildings, structures, fixtures, and equipment, which are installed, placed, or attached in or about the leased premises by Lessee, shall remain the property of Lessee.

11. Condemnation:

In the event the leased premises, or any part thereof, shall be condemned or taken for a public or quasi-public use, then upon payment of any award or compensation arising from such condemnation, there shall be such division of the proceeds as the parties may agree upon as being just and equitable under all of the circumstances, regardless of any technical rule of law. If Lessor and Lessee are unable to agree within thirty (30) days after such award has been paid into court upon what division is just and equitable, the dispute shall be determined by arbitration as provided in Section 12 below.

12. Arbitration:

In the event any controversy or dispute shall arise out of or in any manner relate to the interpretation, operation, or performance of this Agreement, such controversy or dispute shall be submitted to final and binding arbitration pursuant to AS 09.43, at the request of either party hereto. The party desiring arbitration as aforesaid shall give notice in writing to the other party within thirty (30) days from the date any such controversy or dispute shall arise. Failure to give notice within the foregoing time period shall waive any rights to arbitration, except and to the extent the parties may otherwise agree.

13. Quiet Possession:

Provided Lessee is not in default hereunder, Lessor covenants that the Lessee shall have peaceful and quiet enjoyment of the leased premises without let or hindrance on the part of Lessor, and Lessor will warrant and defend Lessee in the peaceful and quiet enjoyment of the leased premises.

14. Notices:

Lessor and Lessee will, from time to time, designate some person, firm, or corporation, which may or may not be Lessor and Lessee, to receive notices, payments, tenders, documents, etc., which either party is required or permitted to deliver to or serve upon the other party, and will furnish to the other party the address of such designated agent. Any written notice herein required or permitted shall be deemed given if and when mailed, postage prepaid, properly addressed to Lessor or Lessee, as the case may be, or to their designated agents as the same shall appear from time to time. Until changed, notices and communications to Lessor or Lessee shall be addressed as follows:

Lessor: President
Kavilco ~~Corporation~~ INCORPORATED
Kasaan, Alaska 99924

Lessee: Executive Director
Tlingit-Haida Regional Electrical Authority
525 Village Street
Juneau, Alaska 99801

15. Surveys, Easements, Rights-of-Way, Permits, Etc.:

Lessor, for and in consideration of the rents, covenants, and conditions hereinafter specified to be paid, performed, and observed by Lessee, does hereby agree to grant, transfer, or demise to Lessee for the term of this Lease and any extensions hereof, any and all rights-of-way, easements, prescriptive or otherwise, which in any manner relate to or be reasonably necessary in the production and distribution of electrical power in about the City of Kasaan, Alaska.

16. Recordation:

This Lease shall be recorded at such locality or localities and in such manner as may be prescribed by law, at Lessee's expense.

17. Default:

(a) If Lessee at any time during the term of this Lease, or any extension thereof, shall (1) fail to make payment of any amounts specified to be paid by Lessee hereunder, or (2) fail to observe or perform any of Lessee's other covenants, agreements, or obligations hereunder, and if such default shall not

be cured within sixty days after Lessor shall have given to Lessee written notice specifying such default or defaults and demanding the cure thereof, Lessor may: (1) Proceed to cure the same and recover any monies expended from Lessee; and/or (2) Bring an action for damages incurred as a result of any such default.

(b) If Lessor at any time during the time of this Lease shall default in any terms and conditions herein, and if such default shall not be cured within sixty days after written notice by Lessee to Lessor speciying such default or defaults and demanding the cure thereof, Lessee may: (1) Proceed to cure the same and recover any monies required from Lessor; and/or (2) Bring an action for damages incurred as a result of any such default.

(c) In addition to any remedies granted pursuant to Subsections (a) and (b) above, the non-defaulting party may bring an action and demand specific performance of the terms and conditions of this Agreement, together with any damages incurred by reason of default.

(d) In the event either party shall be in default in the performance of any of its obligations under this Lease, and an action shall be brought for the enforcement thereof, the defaulting party shall pay the other party all of its expenses incurred therefor, including reasonable attorney fees. In the event either party shall without fault on its part be made a party to any litigation commenced by or against the other, then such other party shall pay all costs and reasonable attorney fees incurred or paid by such party in connection with such litigation.

(e) The remedies described above are in addition to any other remedies at law or equity which may be available to the parties hereto.

(f) No waiver of any particular default on the part of one party hereto shall be deemed to constitute a waiver of any subsequent default; nor shall any forebearance by either party to seek a remedy for any default be deemed a waiver by such party of its rights or remedies with respect to such default.

18. Insurance and Indemnification:

(a) Lessee hereby agrees to indemnify and hold Lessor harmless against any and all liabilities or claims which may arise from the possession, control, or custody of operations on or involving any of the properties subject to this Lease by Lessee, its successors and assigns.

(b) Lessee shall carry and maintain in force the following insurance, the premium for which shall be paid by Lessee:

(1) Workmens Compensation Insurance for an amount not less than Statutory Minimum covering all employees of Lessee employed in, on, or about the properties covered by this Lease; together with Employers Liability Insurance with limits of not less than $300,000.

(2) Comprehensive General Liability Insurance on an "occurrence" basis against claims for personal injury and property damage liability, including without limitation bodily injury or death, with limits of not less than $300,000 per person and $300,000 per occurrence, and $300,000 for property damage per occurrence; such insurance shall also include coverage against liability for bodily injuries or property damage arising out of the use by or on behalf of Lessee, of any owned, non-owned, or hired automotive equipment for limits not less than those specified above;

(3) Fire, Extended Coverage, and Vandalism and Malicious Mischief Insurance on any buildings, structures, improvements, fixtures, and equipment, in an amount not less that $100,000. The coverage on the foregoing insurance shall in

any event be in such amount as may be required to prevent Lessee from becoming a co-insurer under the terms of applicable policies, but in any event, not less than 100% of the then actual replacement costs of the buildings, structures, improvements, fixtures, and equipment (exclusive of excavation and foundation costs and costs of underground tanks, conduits, pilings, and other similar underground items) without deduction for physicial depreciation thereof. Such insurance shall contain the "replacement cost" endorsement.

(4) Such other insurance as may reasonably be requested by Lessor or be required by any mortgagee on any buildings, structures, improvements, fixtures, or equipment covered by this Lease, or at any time now or hereafter purchased, leased, or otherwise acquired by Lessee for purposes of use in connection with the production and distribution of electrical power in and about the City of Kasaan.

(c) Lessee may provide the foregoing forms of insurance pursuant to blanket and umbrella coverages applicable to all its operations and properties among the various communities in Southeast Alaska, provided that adequate coverage in the amount specified above is at all times maintained pursuant to such coverages.

(d) All such aforesaid policies of insurance, when applicable, shall name Lessor as a named insured, as its respective interests may appear.

19. Inspection:

(a) Lessee has inspected the premises conveyed hereby and is satisfied as to their condition, and accepts them on an "as is, whereis" basis. Nothing contained herein, however, shall be construed to prevent suit or accrual of rights of action by Lessee and/or Lessor against third persons arising out of or relating to any defects or breaches or warranties or representations as to leased properties by such third persons.

(b) Lessor shall at all reasonable times during Lessee's business hours have access to the premises for the purposes of inspection.

20. Modification:

No modification of this Agreement shall be binding upon the parties unless it is reduced to writing and signed by both parties.

21. Assignments:

(a) Except as otherwise provided pursuant to Section 9 and 10 above and except as hereinafter otherwise provided, the rights and obligations contained in this Agreement may not be assigned, transferred, pledged, hypothecated, or otherwise conveyed or delegated without the prior written consent of both parties, and any attempt to do so shall be null and void and constitute a default under the terms of this Agreement.

(b) Notwithstanding the foregoing, Lessee may utilize any and all properties governed by this Lease as collateral for loans granted or to be granted by the Rural Electrification Administration, or by other private or public agencies for purposes of maintaining, improving, replacing, repairing or altering the properties or otherwise needed for operations by Lessee in connection with the production and distribution of electrical power. Lessor, if required, shall join in any necessary security documents in connection with any of the foregoing loans, including the pledge or hypothecation of Lessor's interests in and to any of the properties covered hereby.

22. Waiver of Subrogation Rights:

Lessor and Lessee waive any and all claims for recovery from the other for any loss or damage in respect to personal injury or property damage insured under

any insurance policies by either Lessor or Lessee, to the extent of any recovery collectable under such insurance. Each Party hereto agrees to notify its insurance company of the conditions of this Agreement and have its insurance policies properly endorsed, if necessary, so that insurance coverage will not be invalidated by reason of the above waiver.

23. Successors and Assigns:

This Agreement shall be binding upon the parties, their sucessors and assigns.

24. Severability:

Should any provision of this Agreement be held illegal or unenforceable, such invalidity or unenforceability shall not affect the remaining provisions hereof, which shall continue in full force and effect.

25. Applicable Law:

This Agreement shall be construed according to the laws of the State of Alaska.

26. Integration:

This Agreement constitutes the entire Agreement between the parties, all prior negotiations, representations or agreements being merged herein and being superceded hereby.

IN WITNESS WHEREOF, the parties have hereunto set their hand and seals the day, month, and year first above written.

LESSOR:

TLINGIT-HAIDA REGIONAL ELECTRICAL AUTHORITY

By: Robert W. Loenhu

Its: Executive Director

ATTEST:

Della A. Dukes

CORPORATE SECRETARY

LESSEE:

KAVILCO ~~CORPORATION~~ INCORPORATED

By: Louis A. Thompson

Its: President

17(g) In the event that after the construction of the improvements and the commencement of operations, the facility is not operated so as to generate electricity for a period in excess of 30 days, the property would revert to Kavilco and the lease will terminate and be declared in default, with the lessee under obligation at that time to remove all of the improvements on the property -7- within six months after having been unable to generate electricity for 30 days, and if lessee so failed to remove the improvements, then the improvements will also revert to Kavilco.

STATE OF ALASKA)
)ss.
FIRST JUDICIAL DISTRICT)

THIS IS TO CERTIFY that on the [illegible] day of [illegible], 1976, before me, at [illegible], Alaska, personally appeared [illegible] and [illegible] of the Kavilco ~~Corporation~~ INCORPORATED and [illegible] of the Tlingit-Haida Regional Electrical Authority, known by me to be the persons who executed the above and foregoing documents, and they severally acknowledged that they read and knew the contents thereof, that they are authorized to execute the same for and on behalf of the Kavilco ~~Corporation~~ INCORPORATED and Tlingit-Haida Regional Electrical Authority, respectively, and that the same was a free and voluntary act for the uses and purposes therein specified.

IN WITNESS WHEREOF, I set my hand and seal on the date last above mentioned.

[illegible]
Notary Public in and for Alaska
My Commission expires: [illegible]

76-5011
19—
~~FILED~~
REC.
DEC 7 2 04 PM '76
REQUESTED BY Tlingit-Haida
ADDRESS 535 Village St.
Juneau

AMENDED LEASE OF REAL PROPERTY

THIS AMENDED LEASE AGREEMENT, made effective as of this 19th day of November, 1976 by and between the Kavilco, Inc. A Village profit Corporation organized under the Alaska Native Settlement Claims Act and the laws of the State of Alaska (hereinafter referred to as "Lessor") and Tlingit-Haida Regional Electrical Authority, a public body corporate and politic and a political subdivision of the State, organized and existing pursuant to AS 18.57 and AS 10.20 (hereinafter referred to as "Lessee"), and supersedes and amend that certain lease recorded at Book 64, Page 90, in the Ketchikan Recording District on December 7, 1976.

WITNESSETH:

1. Premises:

Lessor, for and in consideration of the rents, covenants, and conditions hereinafter specified to be paid, performed, and observed by Lessee, does hereby let, lease, and demise to Lessee certain improved real property located in the City of Kasaan, Ketchikan Recording District, First Judicial District, State of Alaska, which improved real property consists of a certain tract of land together with any buildings, structures, improvements, fixtures and equipment thereon utilized in the production and distribution of electrical power, which improved real property is more particularly described as follows:

That certain unsubdivided portion of Lot 1, Kasaan Indian Village, U.S. Survey No. 1519, more particularly described as follows:

Beginning at C2Wc of U.S. Survey No. 1519, marked with a 3" brass cap, grouted into a cement filled, 2-1/2" galvanized pipe as shown on the official plat of Alaska Tideland Survey No. 106, thence N 12° 12' E a distance of 268.65 feet to the true point of beginning of the portion herein described thence N 13° 48' W a distance of 50.00 feet; thence S76° 12'W a distance of 50.00 feet; thence S 13° 48' E a distance of 50.00 feet; thence N 76° 12' E a distance of 50.00 feet; back to p.o.b. containing an area of 2,500 square feet, more or less.

TOGETHER WITH, all and singular, the tenaments hereditaments, and appurtenances thereunto belonging or in anywise appertaining.

1. The above-described real property is hereinafter referred to as the "premises".

2. Purposes:

(a) Lessee shall utilize the demised premises for the production and distribution of electrical power for the term of this Lease, including any extensions hereof, and may conduct any additional related services or activities as Lessee in its own discretion may deem meet in the circumstances.

3. Encumbrances:

The premises are leased, subject to restrictions, easements, rights of way, in any, zoning and building restrictions, and governmental regulations, if any, now in effect or hereafter adopted by any governmental authority.

4. Term:

(a) The term of this Lease shall be forty-five (45) years commencing October 1, 1976, through and including September 30, 2021, subject to an option to extend in accordance with the further agreement of the parties.

5. Rental:

Tenant hereby agrees to pay on the first day of each calendar year during the term of this Lease, and any extensions hereof, a yearly rental of one dollar ($1.00). This rental is in addition to any other amounts or obligations which Lessee has agreed to pay, assume or perform, as are more particularly described below.

6. Taxes and Other Charges:

(a) If and to the extent Lessee is not exempt from taxes, assessments, permits, inspection and license fees, and other public charges, whether of a like or different nature, levied upon or assessed against the leased premises and any buildings, structures, fixtures, or improvements now or hereafter located thereon, or arising in respect to the occupancy, use or possession of the leased premises, and which are assessed and are, or become a lien during the term of this Lease, or any extensions hereof, Lessee agrees to exhibit to Lessor, on demand, receipts evidencing payment of all taxes, assessments, and public charges so payable by Lessee.

(b) It is expressly agreed that Lessee shall not be obligated to pay any income tax, profits tax, excise tax, or other tax or charge that may be payable by or chargable to Lessor, under any present or future law of the United States or the State of Alaska, or imposed by any political or taxing subdivision thereof, or any other governmental agency, upon or with respect to the rent or other consideration received by Lessor under this Lease. It is further expressly agreed that Lessee shall not be obligated to pay any transfer, succession, or other similar tax or charge that may be payable under any present or future law of the United States or the State of Alaska, or imposed by any political or taxing subdivision thereof, or any any other governmental agency, by reason of the devolution, succession, transfer, or passing by acquisition or otherwise, of all or any part of Lessor's interests in the premises leased hereunder.

(c) In the event any assessment is levied on the premises for a part of the cost of any public work or improvement assessed according to benefit found by the levying authority to accrue therefrom to the leased premises and the option is given to pay such assessment in installments, Lessee may elect to pay the same in installments and in that case shall be liable only for such installments as shall accrue during the term of this Lease or any extensions thereof. Lessee shall also pay all charges for water, gas, electricity, sewer, or other public utility services rendered during the term of this Lease as such charges become due.

7. Compliance with Law:

Lessee shall comply with all applicable laws, ordinances, and regulations of duly constituted public authorities now or hereafter in any manner affecting the leased premises, or the sidewalks, alleys, streets, and ways adjacent thereto, or any buildings, structures, fixtures, or improvements or the use thereof, whether or not any such laws, ordinances, or regulations which may be hereafter enacted involve a change of policy on the part of the governmental body enacting the same.

8. Care of Premises:

Except and to the extent of rights granted pursuant to Section 12 below, Lessee, at its own cost and expense, shall keep the leased premises, and all buildings, structures, improvements, fixtures, and equipment, which at any time during the term of this Lease or any extensions thereof may be situated or located thereon, and any and all appurtenances thereunto belonging, in good condition and repair, reasonable wear and tear excepted.

9. No Liens Permitted:

(a) With the exception of liens encumbrances, mortgages, or other security instruments which may be required by the Rural Electrification Administration, or by any other federal, state or local governing body or private entity extending loans or credit in respect to the repair, replacement, maintenance, or improvement of electrical facilities and appurtenant buildings, structures, improvements, fixtures, and equipment in respect to the leased premises, Lessee shall not create or permit any lien or encumbrance on the premises which would in any way cloud or jeopardize Lessor's right, title, and interest in and to the premises, or any portion thereof. Lessor retains all statutory rights to post the premises and each and every portion thereof with notices of non-responsibility for liens. Upon expiration of this lease or any extensions thereof, Lessee shall return the leased premises to Lessor free and clear of any liens, encumbrances, mortgages or other security interests, if any.

10. Lessee's Right to Alter, Improve, or Substitute Buildings, Structures, Improvements, Fixtures, and Equipment:

(a) Lessee, when not in default of performance of any of its obligations hereunder, shall have the following rights, during the term of this Lease and any extensions hereof, from time to time, in such manner and to such extent that Lessee may in its judgment deem advisable:

(1) To demolish, remove, or otherwise dispose of any buildings, structures, improvements, fixtures, and equipment presently or subsequently situated upon the demised premises. Upon such removal, such improvements shall be the sole property of the Lessee with the right to dispose of such improvements in any way it should deem advisable.

(2) To erect, place, or install upon the leased premises structures, buildings, improvements, fixtures, and equipment, as from time to time Lessee in its judgment shall deem advisable.

(3) To make such alterations, additions, and repairs to the leased premises as it may desire.

(b) All improvements, including but not limited to buildings, structures, fixtures, and equipment, which are installed, placed, or attached in or about the leased premises by Lessee, shall remain the property of Lessee.

11. Condemnation:

In the event the leased premises, or any part thereof, shall be condemned or taken for a public or quasi-public use, then upon payment of any award or compensation arising from such condemnation, there shall be such division of the proceeds as the parties may agree upon as being just and equitable under all of the circumstances, regardless of any technical rule of law. If Lessor and Lessee are unable to agree within thirty (30) days after such award has been paid into court upon what division is just and equitable, the dispute shall be determined by arbitration as provided in Section 12 below.

12. Arbitration:

In the event any controversy or dispute shall arise out of or in any manner relate to the interpretation, operation, or performance of this Agreement, such controversy or dispute shall be submitted to final and binding arbitration pursuant to AS 09.43, at the request of either party hereto. The party desiring arbitration as aforesaid shall give notice in writing to the other party within thirty (30) days from the date any such controversy or dispute shall arise. Failure to give notice within the foregoing time period shall waive any rights to arbitration, except and to the extent the parties may otherwise agree.

13. Quiet Possession:

Provided Lessee is not in default hereunder, Lessor covenants that the Lessee shall have peaceful and quiet enjoyment of the leased premises without let or hindrance on the part of Lessor, and Lessor will warrant and defend Lessee in the peaceful and quiet enjoyment of the leased premises.

14. Notices:

Lessor and Lessee will, from time to time, designate some person, firm, or corporation, which may or may not be Lessor and Lessee, to receive notices, payments, tenders, documents, etc., which either party is required or permitted to deliver to or serve upon the other party, and will furnish to the other party the address of such designated agent. Any written notice herein required or permitted shall be deemed given if and when mailed, postage prepaid, properly addressed to Lessor or Lessee, as the case may be, or to their designated agents as the same shall appear from time to time. Until changed, notices and communications to Lessor or Lessee shall be addressed as follows:

Lessor: President
Kavilco Incorporated
Kasaan, Alaska 99924

Lessee: Executive Director
Tlingit-Haida Regional Electrical Authority
525 Village Street
Juneau, Alaska 99801

15. Surveys, Easements, Rights-of-Way, Permits, Etc.:

Lessor, for and in consideration of the rents, covenants, and conditions hereinafter specified to be paid, performed, and observed by Lessee, does hereby agree to grant, transfer, or demise to Lessee for the term of this Lease and any extensions hereof, any and all rights-of-way, easements, prescriptive or otherwise, which in any manner relate to or be reasonably necessary in the production and distribution of electrical power in about the City of Kasaan, Alaska.

16. Recordation:

This Lease shall be recorded at such locality or localities and in such manner as may be prescribed by law, at Lessee's expense.

17. Default:

(a) If Lessee at any time during the term of this Lease, or any extension thereof, shall (1) fail to make payment of any amounts specified to be paid by Lessee hereunder, or (2) fail to observe or perform any of Lessee's other covenants, agreements, or obligations hereunder, and if such default shall not

be cured within sixty days after Lessor shall have given to Lessee written notice specifying such default or defaults and demanding the cure thereof, Lessor may: (1) Proceed to cure the same and recover any monies expended from Lessee; and/or (2) Bring an action for damages incurred as a result of any such default.

(b) If Lessor at any time during the time of this Lease shall default in any terms and conditions herein, and if such default shall not be cured within sixty days after written notice by Lessee to Lessor specifying such default or defaults and demanding the cure thereof, Lessee may: (1) Proceed to cure the same and recover any monies required from Lessor; and/or (2) Bring an action for damages incurred as a result of any such default.

(c) In addition to any remedies granted pursuant to Subsections (a) and (b) above, the non-defaulting party may bring an action and demand specific performance of the terms and conditions of this Agreement, together with any damages incurred by reason of default.

(d) In the event either party shall be in default in the performance of any of its obligations under this Lease, and an action shall be brought for the enforcement thereof, the defaulting party shall pay the other party all of its expenses incurred therefor, including reasonable attorney fees. In the event either party shall without fault on its part be made a party to any litigation commenced by or against the other, then such other party shall pay all costs and reasonable attorney fees incurred or paid by such party in connection with such litigation.

(e) The remedies described above are in addition to any other remedies at law or equity which may be available to the parties hereto.

(f) No waiver of any particular default on the part of one party hereto shall be deemed to constitute a waiver of any subsequent default; nor shall any forebearance by either party to seek a remedy for any default be deemed a waiver by such party of its rights or remedies with respect to such default.

18. Insurance and Indemnification:

(a) Lessee hereby agrees to indemnify and hold Lessor harmless against any and all liabilities or claims which may arise from the possession, control, or custody of operations on or involving any of the properties subject to this Lease by Lessee, its successors and assigns.

(b) Lessee shall carry and maintain in force the following insurance, the premium for which shall be paid by Lessee:

(1) Workmens Compensation Insurance for an amount not less than Statutory Minimum covering all employees of Lessee employed in, on, or about the properties covered by this Lease; together with Employers Liability Insurance with limits of not less than $300,000.

(2) Comprehensive General Liability Insurance on an "occurrence" basis against claims for personal injury and property damage liability, including without limitation bodily injury or death, with limits of not less than $300,000 per person and $300,000 per occurrence, and $300,000 for property damage per occurrence; such insurance shall also include coverage against liability for bodily injuries or property damage arising out of the use by or on behalf of Lessee, of any owned, non-owned, or hired automotive equipment for limits not less than those specified above;

(3) Fire, Extended Coverage, and Vandalism and Malicious Mischief Insurance on any buildings, structures, improvements, fixtures, and equipment, in an amount not less that $100,000. The coverage on the foregoing insurance shall in

any event be in such amount as may be required to prevent Lessee from becoming a co-insurer under the terms of applicable policies, but in any event, not less than 100% of the then actual replacement costs of the buildings, structures, improvements, fixtures, and equipment (exclusive of excavation and foundation costs and costs of underground tanks, conduits, pilings, and other similar underground items) without deduction for physicial depreciation thereof. Such insurance shall contain the "replacement cost" endorsement.

(4) Such other insurance as may reasonably be requested by Lessor or be required by any mortgagee on any buildings, structures, improvements, fixtures, or equipment covered by this Lease, or at any time now or hereafter purchased, leased, or otherwise acquired by Lessee for purposes of use in connection with the production and distribution of electrical power in and about the City of Kasaan.

(c) Lessee may provide the foregoing forms of insurance pursuant to blanket and umbrella coverages applicable to all its operations and properties among the various communities in Southeast Alaska, provided that adequate coverage in the amount specified above is at all times maintained pursuant to such coverages.

(d) All such aforesaid policies of insurance, when applicable, shall name Lessor as a named insured, as its respective interests may appear.

19. Inspection:

(a) Lessee has inspected the premises conveyed hereby and is satisfied as to their condition, and accepts them on an "as is, whereis" basis. Nothing contained herein, however, shall be construed to prevent suit or accrual of rights of action by Lessee and/or Lessor against third persons arising out of or relating to any defects or breaches or warranties or representations as to leased properties by such third persons.

(b) Lessor shall at all reasonable times during Lessee's business hours have access to the premises for the purposes of inspection.

20. Modification:

No modification of this Agreement shall be binding upon the parties unless it is reduced to writing and signed by both parties.

21. Assignments:

(a) Except as otherwise provided pursuant to Section 9 and 10 above and except as hereinafter otherwise provided, the rights and obligations contained in this Agreement may not be assigned, transferred, pledged, hypothecated, or otherwise conveyed or delegated without the prior written consent of both parties, and any attempt to do so shall be null and void and constitute a default under the terms of this Agreement.

(b) Notwithstanding the foregoing, Lessee may utilize any and all properties governed by this Lease as collateral for loans granted or to be granted by the Rural Electrification Administration, or by other private or public agencies for purposes of maintaining, improving, replacing, repairing or altering the properties or otherwise needed for operations by Lessee in connection with the production and distribution of electrical power. Lessor, if required, shall join in any necessary security documents in connection with any of the foregoing loans, including the pledge or hypothecation of Lessor's interests in and to any of the properties covered hereby.

22. Waiver of Subrogation Rights:

Lessor and Lessee waive any and all claims for recovery from the other for any loss or damage in respect to personal injury or property damage insured under

any insurance policies by either Lessor or Lessee, to the extent of any recovery collectable under such insurance. Each Party hereto agrees to notify its insurance company of the conditions of this Agreement and have its insurance policies properly endorsed, if necessary, so that insurance coverage will not be invalidated by reason of the above waiver.

23. Successors and Assigns:

This Agreement shall be binding upon the parties, their sucessors and assigns.

24. Severability:

Should any provision of this Agreement be held illegal or unenforceable, such invalidity or unenforceability shall not affect the remaining provisions hereof, which shall continue in full force and effect.

25. Applicable Law:

This Agreement shall be construed according to the laws of the State of Alaska.

26. Integration:

This Agreement constitutes the entire Agreement between the parties, all prior negotiations, representations or agreements being merged herein and being superceded hereby.

IN WITNESS WHEREOF, the parties have hereunto set their hand and seals the day, month, and year first above written.

LESSEE:

TLINGIT-HAIDA REGIONAL ELECTRICAL AUTHORITY

By: Robert W. Loerchen

Its: Executive Director

KAVILCO INCORPORATED CORPORATE SEAL 1974 KASAAN ALASKA

ATTEST:

Della A. Dukes
Corporate Secretary

LESSOR:

KAVILCO INCORPORATED

By: Louis A. Thompson

Its: President

BOOK 165 PAGE 288
Ketchikan Recording District

STATE OF ALASKA)
)ss.
FIRST JUDICIAL DISTRICT)

THIS IS TO CERTIFY that on the 17 day of February, 1977, before me, at Juneau, Alaska, personally appeared Lowell A. Thompson and Nella R. Dukes of the Kavilco Corporation and Robert W. Loescher and _____ of the Tlingit-Haida Regional Electrical Authority, known by me to be the persons who executed the above and foregoing documents, and they severally acknowledged that they read and knew the contents thereof, that they are authorized to execute the same for and on behalf of the Kavilco Corporation and Tlingit-Haida Regional Electrical Authority, respectively, and that the same was a free and voluntary act for the uses and purposes therein specified.

IN WITNESS WHEREOF, I set my hand and seal on the date last above mentioned.

Charlotte M. Hilbert
Notary Public in and for Alaska
My Commission expires: 9-17-78

77-0691
19
RECORDED-FILED
REC.
FEB 22 2 49 PM '77
REQUESTED BY THREA
ADDRESS 525 Willoughby St.
Juneau, Alaska

SECOND AMENDED LEASE/EASEMENT OF REAL PROPERTY

THIS SECOND AMENDED LEASE AGREEMENT, made effective as of this 19th day of October, 1994 by and between Kavilco, Inc. a Village profit Corporation organized under the Alaska Native Settlement Claims Act and the laws of the State of Alaska (hereinafter referred to as "Lessor") and Tlingit-Haida Regional Electrical Authority ("THREA"), a public body corporate and politic and a political subdivision of the State, organized and existing pursuant to AS 18.57 and AS 10.20 (hereinafter referred to as "Lessee"), amends that certain Amended Lease of Real Property executed February 17, 1977 and recorded at Book 65, Page 281, in the Ketchikan Recording District on February 22, 1977 so as to describe certain real property and to add certain easements.

W I T N E S S E T H:

1. Section 1, Premises, is hereby amended as follows:

Lessor, for and in consideration of the rents, covenants, and conditions hereinafter specified to be paid, performed, and observed by Lessee, does hereby let, lease, and demise to Lessee certain improved real property located in the City of Kasaan, Ketchikan Recording District, First Judicial District, State of Alaska, which improved real property consists of a certain tract of land together with any buildings, structures, improvements, fixtures and equipment thereon utilized in the production and distribution of electrical power along with access for pedestrian or vehicular traffic to service and maintain the power house and fuel storage, which improved real property is more particularly described as

follows:

That certain unsubdivided portion of Lot 1, Kasaan Indian Village, U.S. Survey No. 1519, more particularly described as follows:

A. Fuel Storage Description:

All that tract of land situate in U.S.S. 280, near Kasaan, Alaska, bounded and described as follows:

TO FIND the place of beginning, COMMENCE at WCMC2 ATS 106, a 3" brass cap on a 2 1/2" galvanized iron pipe;

THENCE N. 19 degrees 18 minutes 56 seconds E, a distance of 537.51 feet to a point for the PLACE OF BEGINNING;

THENCE N. 7 degrees 09 minutes, 20 seconds E, a distance of 42.36 feet to a point;

THENCE N. 82 degrees 50 minutes 40 seconds W, a distance of 62.46 feet to a point;

THENCE S. 7 degrees 09 minutes 20 seconds W, a distance of 42.36 feet to a point;

THENCE S. 82 degrees 50 minutes 40 seconds E, a distance of 62.46 feet to the PLACE OF BEGINNING containing 2646 square feet, more or less.

This description holds the direction from WCMC2 ATS 106 to USLM No. 5 as N. 62 degrees 42 minutes W for the Basis of Bearings.

B. Powerhouse Description:

All that parcel of land located within U.S.S. 1519, the Kasaan Townsite, being more particularly described as follows:

Commencing at the Witness Corner to the Meander Corner 2 of A.T.S. 106, a galvanized iron pipe 3 1/2" diameter with 3" brass cap; thence N1°52'38"E, 250.79 ft. to THE POINT OF BEGINNING of this parcel. Thence N13°48'00"W, 65.00 ft. Thence N76°12'00"E, 50.00 ft. Thence S13°48'00"E, 65.00 ft. Thence S76°12'00"W, 50.00 ft. to THE POINT OF BEGINNING. This parcel contains 3250 square feet, more or less. The Basis of Bearings for this description is the line from the Witness Corner to the Meander Corner 2 of A.T.S. 106 to U.S.L.M. No. 5 held as N62°42'W.

2. Pipeline Easements.

Undersigned Kavilco hereby further conveys unto THREA and to its licensees, successor and assigns for ONE DOLLAR AND NO/100 ($1.00) and other good and valuable consideration, the receipt of which is hereby acknowledged, a right of way and easement:

A. Centered on pipeline #1 which runs from the beach to the fuel storage as follows:

All that parcel of land; 10.00 feet wide, centered on an existing 3 inch diameter pipeline; lying entirely within U.S.S. 280, near Kasaan, Alaska; described as follows:

To find a place of beginning, COMMENCE at WCMC2, a 3" brass cap on a 2 1/2" galvanized iron pipe;

THENCE N. 14 degrees 29 minutes 54 seconds E, a distance of 546.16 feet, to a point for the place of beginning, on the SE boundary of the parcel.

From the aforementioned place of beginning, on the existing pipeline, THENCE N. 70 degrees 25 minutes 56 seconds W, along the centerline of the parcel, a distance of 138.03 feet to a point:

THENCE N. 64 degrees 44 minutes 06 seconds W, along the centerline of the parcel, a distance of 62.14 feet to a point;

THENCE N. 0 degrees 37 minutes 28 seconds E, along the centerline of the parcel, a distance of 171.35 feet to a point;

THENCE S. 88 degrees 30 minutes 23 seconds W, along the centerline of the parcel, a distance of 47.97 feet to a point on the NW boundary of the parcel. The described parcel containing 4195 square feet, more or less.

This description holds the direction from WCMC2 ATS 106 to USLM No. 5 as N. 62 degrees 42 minutes W for the Basis of Bearings.

Pipeline #1 is also the subject of an easement granted by the City of Kasaan to Tlingit-Haida Regional Electrical Authority executed April 14, 1992. Said easement is appended to this Second Amended Lease; and

B. Centered on pipeline #2, the pipeline running from the fuel storage to the power plant, as follows:

All that parcel of land; 10.00 feet wide, centered on an existing 2 inch diameter pipeline; in U.S.S. 280 and U.S.S. 1519 near Kasaan, Alaska; described as follows:

To find the place of beginning, COMMENCE at WCMC2, a 3" brass cap on a 2 1/2" galvanized iron pipe;

THENCE N. 6 degrees 27 minutes 08 seconds E, a distance of 307.71 feet, to a point for the place of beginning, on the SW boundary of the parcel.

From the aforementioned place of beginning, on the existing pipeline, THENCE N. 17 degrees 18 minutes 20 seconds W, along the centerline of the parcel, a distance of 3.27 feet, to a point;

THENCE N. 76 degrees 11 minutes 48 seconds E, along the centerline of the parcel, a distance of 6.62 feet to a point;

THENCE N. 36 degrees 17 minutes 15 seconds E, along the centerline of the parcel, a distance of 71.87 feet, to a point;

THENCE N. 10 degrees 44 minutes 49 seconds E, along the centerline of the parcel, a distance of 63.25 feet, to a point;

THENCE N. 62 degrees 07 minutes 14 seconds E, along the centerline of the parcel, a distance of 79.36 feet, to a point;

THENCE N. 7 degrees 19 minutes 59 seconds E, along the centerline of the parcel, a distance of 49.47 feet to a point;

THENCE N. 86 degrees 42 minutes 42 seconds W, along the centerline of the parcel, a distance of 3.30 feet, to a point on the NE boundary of the parcel. The described parcel containing 2771 square feet, more or less.

This description holds the direction from WCMC2 ATS 106 to USLM No. 5 as N. 62 degrees 42 minutes W for the Basis of Bearings.

Together with all rights of ingress and egress necessary for the full and complete use, occupation and enjoyment of the

easement hereby granted, and all rights and privileges incident thereto, including the right from time to time to control, cut, trim and remove trees, brush, overhanging branches and other obstructions which may injure or interfere with the grantee's use, operation, maintenance or repair of grantee's fuel pipeline system.

3. Section 14, Notices, is hereby amended as follows:

Lessor and Lessee will, from time to time, designate some person, firm, or corporation, which may or may not be Lessor and Lessee, to receive notices, payments, tenders, documents, etc., which either party is required or permitted to deliver to or serve upon the other party, and will furnish to the other party the address of such designated agent. Any written notice herein required or permitted shall be deemed given if and when mailed, postage prepaid, properly addressed to Lessor or Lessee, as the case may be, or to their designated agents as the same shall appear from time to time. Until changed, notices and communications to Lessor or Lessee shall be addressed as follows:

Lessor: President
Kavilco Incorporated
Kasaan, Alaska 99924

Lessee: General Manager
Tlingit-Haida Regional Electrical Authority
P.O. Box 210149
Auke Bay, Alaska 99921

3. In all other respects the provisions of that certain amended lease by and between the parties dated February 17, 1977 and recorded February 22, 1977 remain unchanged and in full force

and effect.

IN WITNESS WHEREOF, the parties have hereunto set their hand and seals the day, month, and year first above written.

LESSOR:	LESSEE
KAVILCO, INCORPORATED	TLINGIT-HAIDA REGIONAL ELECTRICAL AUTHORITY
By: Louis A. Thompson	By: [signature]
Its: President	Its: General Manager

STATE OF ALASKA)
)ss.
FIRST JUDICIAL DISTRICT)

THIS IS TO CERTIFY that on the 1st day of August, 1994, before me, the undersigned, a notary public, duly commissioned and sworn as such personally appeared Louis A. Thompson, President of KAVILCO INCORPORATED, a corporation organized and existing by virtue of the laws of the State of Alaska, to me known to be the President of said corporation and acknowledged that said instrument was signed on behalf of the corporation by authority of its Board of Directors and that the said President acknowledged said instrument to be the act and deed of said corporation.

IN WITNESS THEREOF, I have hereunto set my hand and official seal this 1st day of August, 1994.

MICHAEL G. MEDFORD NOTARY PUBLIC STATE OF ALASKA

[signature]
Notary Public/State of Alaska
My commission expires: 12/15/98

STATE OF ALASKA)
)ss.
FIRST JUDICIAL DISTRICT)

THIS IS TO CERTIFY that on the _____ day of _____, 1994, before me, the undersigned, a notary public, duly commissioned and sworn as such personally appeared

Robert Martin Jr., General Manager President of TLINGIT-HAIDA REGIONAL ELECTRICAL AUTHORITY, a corporation organized and existing by virtue of the laws of the State of Alaska, to me known to be the President of said corporation and acknowledged that said instrument was signed on behalf of the corporation by authority of its Board of Directors and that the said Robert Martin Jr. acknowledged said instrument to be the act and deed of said corporation.

IN WITNESS THEREOF, I have hereunto set my hand and official seal this 19 day of October, 1994.

CHARLOTTE M. DUNCAN NOTARY PUBLIC STATE OF ALASKA

Charlotte M. Duncan
Notary Public/State of Alaska
My commission expires: 1/23/95

Return to:
Ruddy, Bradley & Kolkhorst
PO Box 34338
Juneau, AK 99803-4338

97-005034 33
KETCHIKAN
RECORDING DISTRICT

1997 DEC 22 PM 3:32
REQUESTED BY Ruddy, Bradley & Kolkhorst

AFTER RECORDING IN THE KETCHIKAN RECORDING DISTRICT, RETURN TO:

BOOK 0337 PAGE 445

John A. Reed, Esq.
Davis Wright Tremaine LLP
2600 Century Square
1501 Fourth Avenue
Seattle, WA 98101

ASSIGNMENT OF LEASE

For value received, Tlingit-Haida Regional Electrical Authority ("THREA"), whose mailing address is: P.O. Box 210149, Auke Bay, Alaska 99821, lessee under that certain Second Amended Lease/Easement of Real Property between Kavilco, Inc. as Lessor and THREA, as Lessee, recorded on December 22, 1997 at Book 278, Page 818, records of the Ketchikan Recording District, First Judicial District, State of Alaska, does hereby assign, for good and valuable consideration, and subject to all rents, covenants, and conditions, all of THREA's right, title and interest, in the lease to: Alaska Power Company, whose mailing address is: P.O. Box 3222, Port Townsend, WA 98368 and its successors and assigns, and Alaska Power Company does hereby assume all of THREA's obligations and duties under the lease, for the unexpired term of the above lease commencing on the date this assignment is executed by THREA and Alaska Power Company.

Assignor: Tlingit-Haida Regional Electrical Authority

By: _____
Richard George, Sr., Chairman

STATE OF ALASKA)
)ss.
FIRST JUDICIAL DISTRICT)

THIS IS TO CERTIFY that on this 15th day of December, 2001 before me appeared Richard George, Sr., known to me to be the chairman of the entity named as assignor who executed this assignment and acknowledged voluntarily signing the same as the authorized officer of the assignor.

MARILYN SANMIGUEL NOTARY PUBLIC STATE OF ALASKA

_____
Notary Public in and for the State of Alaska
My Commission Expires 10-19-2004

The Assignee, Alaska Power Company, herein expressly accepts all right, title and interest of the assignor and assumes all obligations of the assignor under the lease described above and agrees to fulfill all the terms, conditions and covenants of such lease as of the date of this assignment.

Assignee: Alaska Power Company

By

Name: Howard Garner
Title: Executive Vice President

STATE OF ~~ALASKA~~ WASHINGTON)
COUNTY OF JEFFERSON) ss.
~~THIRD JUDICIAL DISTRICT~~)

THIS IS TO CERTIFY that on this 24th day of December, 2001, before me appeared Howard Garner, known to me to be an officer of the corporation named as assignee who executed this assignment and acknowledged voluntarily signing the same as the authorized office of the corporation.

ANNIE L. VAN AUSDLE
COMMISSION EXPIRES
NOTARY
PUBLIC
FEB 25, 2003
STATE OF WASHINGTON

Annie L. Van Ausdle
Notary Public in and for the State of Alaska
My Commission Expires 2/25/03

CONSENT OF LANDLORD

Kavilco, Inc., lessor under the above described Lease, hereby consents to Tlingit-Haida Regional Electrical Authority's assignment of all of it right, duties and obligation in the said Lease to Alaska Power Company.

By: Scott Burns
Name: Scott Burns
Title: Chief Financial Officer

STATE OF ~~ALASKA~~ WASHINGTON
)ss.
~~FIRST JUDICIAL DISTRICT~~)
COUNTY OF KING

THIS IS TO CERTIFY that on this 21st day of December, 2001 before me appeared Scott Burns, known to me to be the Chief Financial Officer of Kavilco, Inc., the corporation that executed this assignment and acknowledged voluntarily signing the same as the authorized officer of the corporation.

Notary Public
State of Washington
CHARISSE L. DWYER
MY COMMISSION EXPIRES
May 1, 2005

Charisse L. Dwyer
Notary Public in and for the State ~~of Alaska~~ WASHINGTON
My Commission Expires 5/1/05

005681
KETCHIKAN
RECORDING DISTRICT
$21.00
CC

2001 DE 31 AM 11:29
REQUESTED BY KTA

"**Notice:** We make no representation that this is neither a plat nor a survey. It is furnished merely as a convenience to aid you in locating the land indicated hereon with reference to streets and other land. No liability is assumed by reason of any reliance hereon."

1519

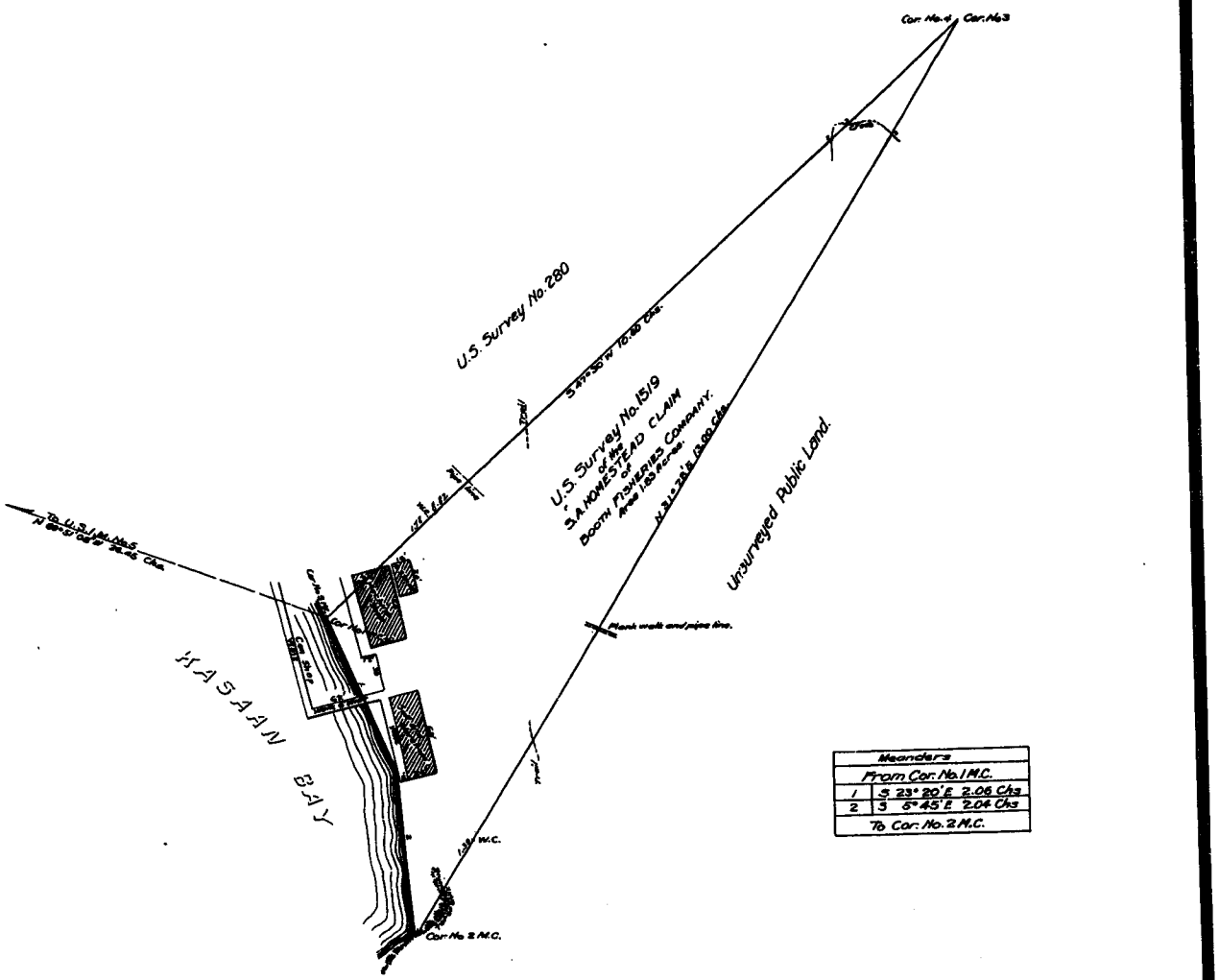

Meanders		
From Cor. No. 1 M.C.		
1	S 23° 20' E	2.06 Chs
2	S 6° 45' E	2.04 Chs
To Cor. No. 2 M.C.		

PLAT

OF

U. S. SURVEY No. 1519

OF THE

S. A. HOMESTEAD CLAIM

OF

BOOTH FISHERIES COMPANY

UNDER ACT OF CONGRESS APPROVED MAY 14, 1898
AMENDED MARCH 3, 1903

SITUATE

East shore of Kasaan Bay

Lat. 55°32'04" N.
Long. 132°23'43" W

TERRITORY OF ALASKA

SCALE OF	one (1)	CHS. TO INCH
VARIATION	29° 30'	EAST
AREA	1.83	ACRES

AS
SURVEYED BY

Charles S. Hubbell,

U. S. DEPUTY SURVEYOR

October, 3-6 1904

U. S. SURVEYOR GENERAL'S CERTIFICATE

Surveyor General's Office,

Juneau, Alaska, February 7, 1905

The original field notes of the survey of the S.A. Homestead Claim of Booth Fisheries Company from which this plat has been made, have been examined and approved, and are on file in this office, and I hereby certify that they furnish such an accurate description of said claim as will, if incorporated into a patent, serve fully to identify the premises, and that such reference is made therein to natural objects and permanent monuments as will perpetuate and fix the same thereof.

And I further certify that this is a correct plat of said claim, made in conformity with said original field notes of the survey thereof. And the same is hereby approved.

Surveyor General of the Territory of Alaska.

"**Notice:** We make no representation that this is neither a plat nor a survey. It is furnished merely as a convenience to aid you in locating the land indicated hereon with reference to streets and other land. No liability is assumed by reason of any reliance hereon."

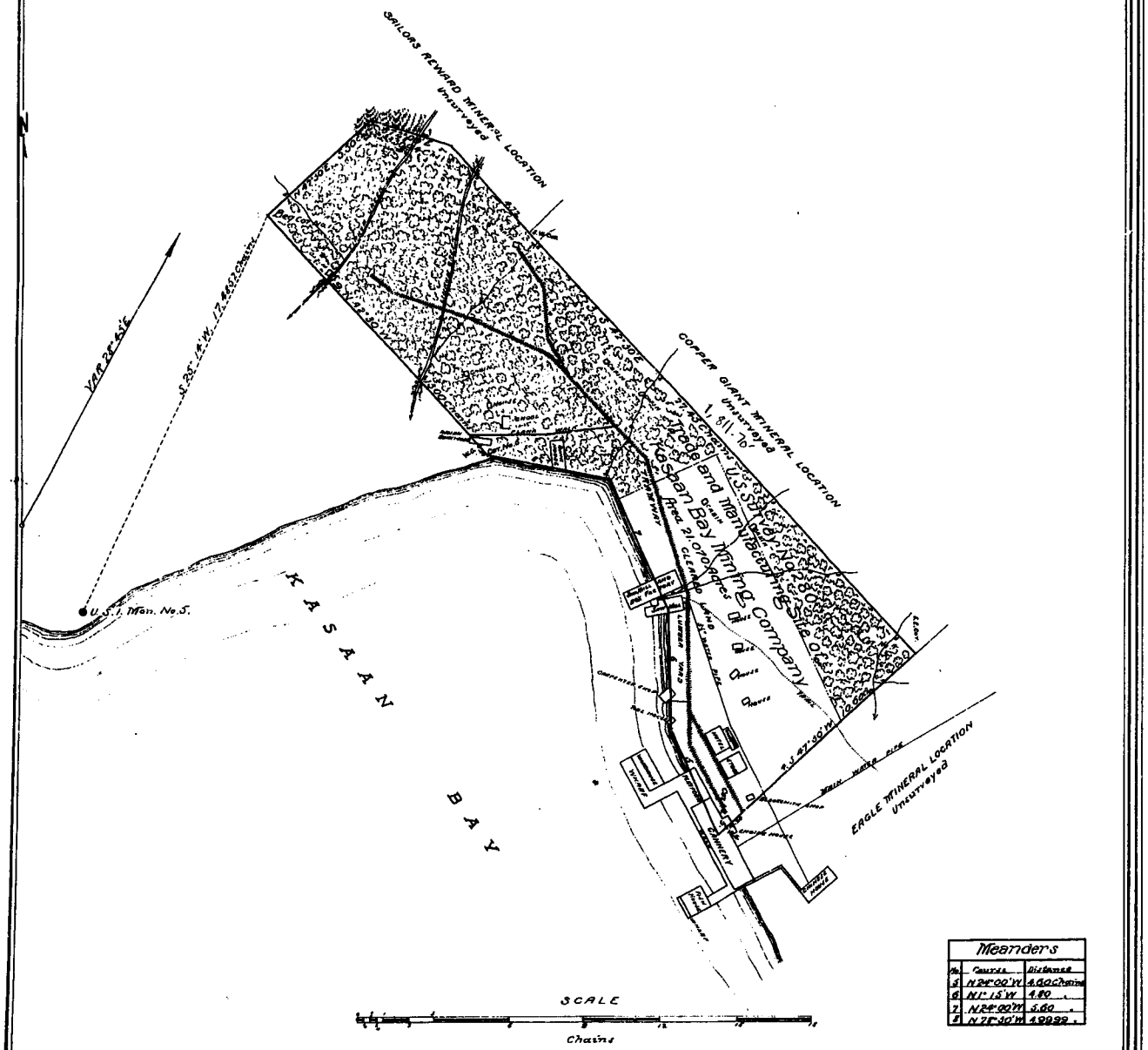

Meanders		
No.	Course	Distance
5	N 24°00'W	4.60 Chains
6	N 1°15'W	4.80 "
7	N 24°00'W	5.60 "
8	N 78°30'W	4.9999 "

PLAT

OF

U. S. SURVEY NO. 280

OF THE

Trade and Manufacturing Site

UNDER ACT OF MAY 14, 1898

OF

Kasaan Bay Mining Company

SITUATE

On the North Shore of Kasaan Bay
Prince of Wales Island

DISTRICT OF ALASKA

SCALE OF	3.00	CHS. TO INCH
VARIATION	28°45'	EAST
AREA	21.070	ACRES

AS

SURVEYED BY

N. B. Whitfield

U. S. DEPUTY SURVEYOR

October 6-10, 1900

The original field notes of the survey of the Trade and Manufacturing site of the Kasaan Bay Mining Company from which this plat has been made have been examined and approved, and are on file in this office; and I hereby certify that they furnish such an accurate description of said claim as will, if incorporated into a patent, serve fully to identify the premises, and that such reference is made therein to natural objects and permanent monuments as will perpetuate and fix the LOCUS thereof.

And I further certify that this is a correct plat of said claim, made in conformity with said original field notes of the survey thereof. And the same is hereby approved.

Surveyor General's Office,

Sitka, Alaska, December 26, 1902.

Surveyor General of the District of Alaska.

CERTIFICATE OF DEPUTY SURVEYOR

I, U. S. Deputy Surveyor for Alaska, do hereby certify that this is a true and correct plat of a tract of acres of land claimed for entry

and in accordance with accompanying field notes of the survey of the same made by me.

U. S. Deputy Surveyor.

Kavilco Incorporated/City of Kasaan
GROUND LEASE – Bulk Fuel Tank Farm

This lease is entered into this _____ day of _____ 2005, between Kavilco Incorporated, hereinafter, called the Lessor, whose address is P.O. Box KXA, Ketchikan, AK 99950 and the City of Kasaan, hereinafter called the Lessee, whose address is P.O. Box KXA, Kasaan, AK 99950.

The parties agree as follows:

1. The Premises. The Lessor agrees to lease to the Lessee the right to construct, operate, and maintain a bulk fuel transfer and storage site and related facilities on the surface estate of the following described real property:

   That portion of a parcel of land located within portions of U.S Survey 280 and U.S. Survey 1519 within Township 73 South, Range 86 East, Copper River Meridian, located in the Ketchikan Recording District, First Judicial District, State of Alaska, as depicted on the attached Exhibit A.

2. Term of Lease. The lease term shall be for 40 years provided the premises are used for bulk fuel storage and transfer and related facilities, and, provided further that the other provisions of the lease are complied with.

3. Automatic Termination. The lease shall automatically terminate if the premises cease to be used for a bulk fuel transfer and storage site and related facilities.

4. Rent. Because of mutual benefits to both the Lessor and the Lessee and in consideration of the benefits from construction and operation of the bulk fuel storage facilities, no rent will be charged.

5. Reservation of Rights. The Lessor reserves the right to grant to others the rights and privileges to use the premises not specifically and exclusively granted to the Lessee. The rights and privileges granted to the Lessee in this lease are the only rights and privileges granted to the Lessee by this lease. The Lessee has no easements, rights or privileges, expressed or implied, other than those specifically granted by this lease.

6. Valid Existing Rights. This lease is entered into and made subject to all valid existing rights, including easements, rights-of-way, reservations, or other interests in the premises, in existence on the date the lease is entered into.

7. Encumbrance of Premises. During the term of this lease, the Lessee may not assign this lease or sublet the premises, nor enter into any lease, easement, or other obligation of the Lessor's title without the prior written approval of the Lessor. Any such act, without prior written approval of the Lessor, is void against the Lessor's title to the premises.

8. Secondary Operator. Lessor acknowledges that the Denali Commission may designate a secondary operator to operate the bulk fuel facility on the premises, as provided in the Secondary Operator Agreement between the Denali Commission dated _____. Lessor agrees that in this event, this lease is fully transferable and assignable to the secondary operator without the need for prior written approval of the Lessor.

9. Subleases. The Lessee shall provide the Lessor with copies of all applications for subleases, assignments, proposals for development, and construction as-builts, as they become available.

10. Successors Bound. All covenants and provisions in this lease extend to and bind the legal representatives, successors, sublessees, and assigns of the parties.

11. Access to Premises. The Lessor reserves the right of ingress to and egress from the premises for itself and its authorized representatives. The Lessee shall have access to the premises sufficient to enable the Lessee to conduct its operations, maintenance, and repairs and to enjoy its other rights and discharge its other responsibilities under the Operations and Maintenance Agreement. The Lessee shall maintain the premises that it occupies or uses in an orderly, neat and clean condition, free of hazard and nuisance. The Lessee shall not cause, maintain, or permit any public or private nuisance to exist on the premises. The Lessee shall conduct its operations on the premises so as to avoid interference with the other Participants' operations on the premises.

12. Operation and Maintenance. Operations and Maintenance will be in accordance with the Operations and Maintenance Agreement, attached hereto as Exhibit B.

13. Surface Reservation. Unless otherwise stated in this lease, the Lessee may not sell or remove for use elsewhere any of the surface resources of the premises.

14. Breach and Remedies.

    (a) The premises are to be used only for purposes of bulk fuel storage and transfer and related facilities. The premises are to be used only for purposes related to developing, operating and protecting the bulk fuel storage system and other activities that will serve the greater good of the community of Kasaan and for no other purpose without specific written authorization of the Lessor. The Lessor retains the right to terminate this lease upon 30 days written notice if the premises are used for unauthorized purposes.

(b) Time is of the essence in this lease. If the Lessee breaches any provision of this lease, other than a breach for improper use of the premises which is governed by subparagraph (a), and the breach is not remedied within 30 days after written notice of it has been served on the Lessee, the Lessee is subject to any legal action that the Lessor considers appropriate, including the termination of this lease. The Lessor is not liable for any expenditures made by the Lessee in the event of the termination of this lease.

(c) If this lease is terminated by summary proceeding or in any other manner, or if the premises or any part of it is abandoned by the Lessee during the term of this lease, the Lessor, after written notice to the Lessee, may immediately, or at any time afterwards, enter or re-enter and take possession of the premises, or any part of it, without liability for any damage, and may remove all persons and property from it either by summary proceeding or by legal action. The words "entry" and "re-entry" are not restricted to their technical legal meaning.

15. No waiver. The failure of the Lessor to insist on any one or more instance upon the strict performance by the other party of any provision in this lease may not be considered as a waiver for the future; the provision will continue in full force.

16. Notice of Claim. The parties agree to immediately notify each other of any claim, demand, or lawsuit arising out of or affecting the Lessee's occupation or use of the premises. Both parties will fully cooperate in the investigation and litigation of any claim, demand, or lawsuit affecting the premises.

17. Laws and Taxes. At no expense to the Lessor, the Lessee will conduct all activities authorized by this lease in compliance with all Federal, State, and local laws, ordinances, rules and regulations now or hereafter in force, which apply to the activities authorized herein or to the use, care, operation, maintenance, and protection of the facilities, including but not limited to matters of health, safety, sanitation, and pollution. The acquisition of any necessary licenses or permits and payment of any taxes and special assessments accruing against the premises during this lease term will be the responsibility of the Lessee or its sublessees and not that of the Lessor.

18. Notices. All notices and other writings required or permitted by this lease must be sent by registered or certified mail, postage prepaid, to the parties at the following addresses. A party must notify the other in writing of any change in address.

Lessor: Kasaan Incorporated
P.O. Box KXA
Ketchikan, Alaska 99950

Lessee: City of Kasaan
P.O. Box KXA
Kasaan, AK 99950

19. Denial of Warranty Concerning Title or Conditions. The Lessor make no specific warranties, expressed or implied, concerning the title or condition of the premises, including survey, access, or suitability for any use, including those uses authorized by this lease. The Lessee leases the premises subject to any and all of the covenants, terms, and conditions affecting the Lessor's title to the premises.

20. Integration and Modification. This lease, including all documents, which by reference are incorporated in it or made a part of it, contains the entire agreement between the parties. This lease may not be modified or amended except by a document signed by both parties to this lease. Any amendment or modification, which is not in writing and signed by both parties, is of no legal effect.

21. Severability of Clauses of Lease. If any provision of this lease is adjudged to be invalid, that judgment does not affect the validity of any other provision of this lease, nor does it constitute any cause of action in favor of either party as against the other.

22. Headings. The heading of the numbered paragraphs in this lease shall not be considered in construing any provision of this lease.

BY SIGNING THIS LEASE, the Lessor and the Lessee, agree to be bound by its provision as set out above.

Attachments
Exhibit A. Map
Exhibit B: Operations and Maintenance Agreement

Kasaan Incorporated
Lessor:

_____

_____

By: _____

ACKNOWLEDGMENT

STATE OF ALASKA)
) ss.
FIRST JUDICIAL DISTRICT)

This is to certify that on _____, 2005, before me appeared _____, known by me to be the _____, of Kavilco Incorporated, who is authorized to sign this lease and who executed this lease and acknowledged voluntarily signing it on behalf of Kavilco Incorporated as Lessor.

(SEAL)

_____
Notary Public in and for the State of Alaska
My commission expires: _____

City of Kasaan
Lessee:

_____

_____

_____

ACKNOWLEDGMENT

STATE OF ALASKA)
) ss.
FIRST JUDICIAL DISTRICT)

This is to certify that on _____, 2005, before me appeared _____, known by me to be the _____, of the City of Kasaan, who is authorized to sign and who executed this lease and acknowledged voluntarily signing it on behalf of the City of Kasaan as Lessee.

(SEAL)

_____
Notary Public in and for the State of Alaska
My commission expires: _____

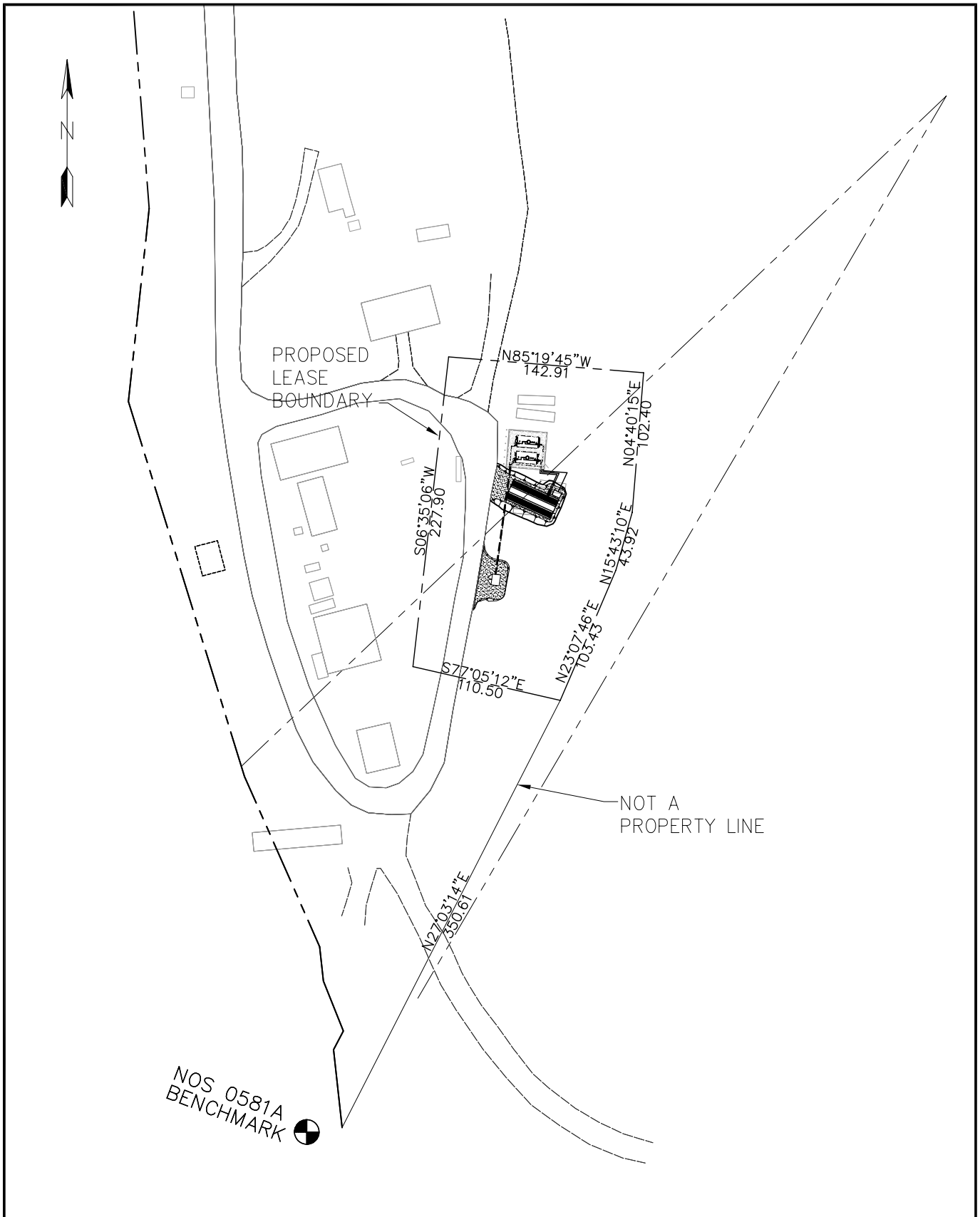

FILE NAME:

CRW ENGINEERING GROUP, LLC

Project:

State of Alaska
Department of Community
and Economic Development
AIDEA/AEA
Rural Energy Group
813 West Northern Lights Blvd.
Anchorage, Alaska 99503

ALASKA ENERGY AUTHORITY

KASAAN

BULK FUEL UPGRADE PROJECT

LEASE BOUNDARY
EXHIBIT A

Project No:	30401.19
Drawn By:	SOK
Scale:	
Date:	06/05
Figure:	EXHIBIT A

EEIS CONSULTING ENGINEERS, INC.

June 30, 2005

Alaska State Fire Marshall
Department of Public Safety
5700 Tudor Road
Anchorage, Alaska 99507

Project: Kassan Bulk Fuel Upgrade

Dear Mr. Boothby:

EEIS is assisting CRW Engineers on a bulk fuel upgrade in Kassan, Alaska. The upgrade will make the Kassan facility compliant with current codes. Currently two 5,000 gallon tanks containing gasoline and diesel are housed in a wood framed building at the fueling facility. Fuel is dispensed from pumps mounted on the front of the tanks.

It is our desire to retain the wood framed enclosure, as it protects the tanks from the rain, and reduces the number of times the containment has to be pumped out. Our plan is to replace the existing tanks with Fireguard Tanks and construct a remote fuel dispensing station. The dispensing station will be located well beyond the 25 foot minimum called for in the IFC. The land around the facility will be replatted so that all boundaries are at least 15 feet from the enclosure housing the tanks.

The interior of the enclosure will be considered Class I Division I and will have explosion proof fixtures and fittings. At this time it has not been decided if the walls and ceiling of the enclosure will receive finishes. If it does, the interior

P.O. BOX 92169, Anchorage, AK 99509-2169 - (907) 258-3231 - Fax (907) 272-1288

finishes will be Durarock or a similar material that will resist moisture and dampness. The open front of the enclosure will be fenced and louvers will be installed in the rear wall to allow circulation in the enclosure.

If you have any questions or if I can help in any way, please call.

Sincerely,

Richard C. Button, P.E.
Principal

RCB/ea

P.O. BOX 92169, Anchorage, AK 99509-2169 - (907) 258-3231 - Fax (907) 272-1288

NOTES (FOR THIS PLAN)

(N1) LOT LINE TO BE RELATED TO THIS LOCATION

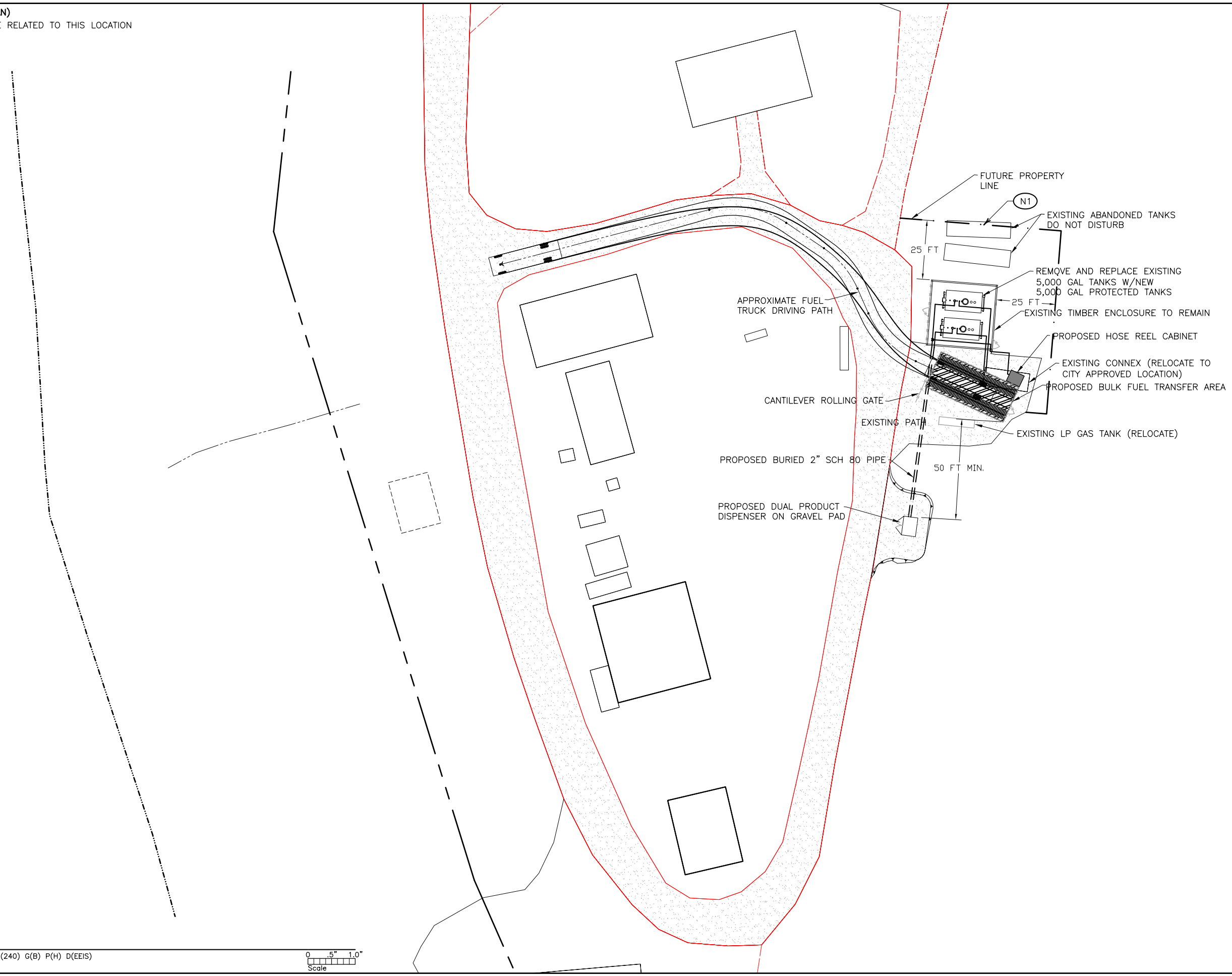

3.1 SITE PLAN

205038_SITE S(240) G(B) P(H) D(EEIS)

0 .5" 1.0"
Scale

FileName: F:\CURRENT\2005\205038\SHEETS\205038_C1-0.dwg
Plotted on: Friday, July 01, 2005 - 11:21am
UserName: Mark

STATE OF ALASKA 49TH REGISTERED PROFESSIONAL ENGINEER Richard C. Button CE-5031

EEIS CONSULTING ENGINEERS, INC.

P.O. Box 92169 Anchorage, Alaska 99509-2169 (907)258-3231

SITE PLAN

KASSAN
ANCHORAGE, ALASKA EEIS JOB #205038.BG1

revisions
-

released for
PERMIT

release date
06-24-05

sheet
C1.0

FileName: F:\CURRENT\2005\205038\SHEETS\205038_C2-0.dwg
Plotted on: Friday, July 01, 2005 - 10:44am
UserName: Mark

PHOTO 1

PHOTO 3

PHOTO 2

PHOTO 4

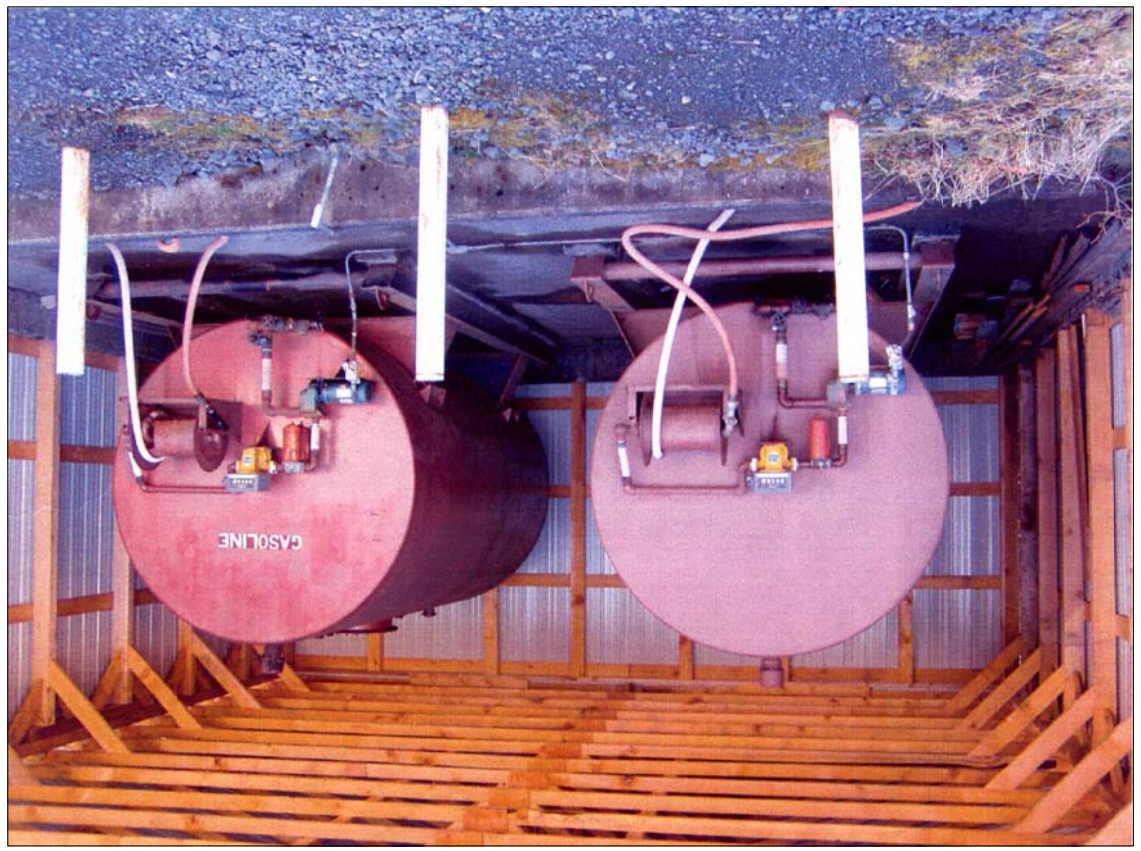

SITE PHOTOS

KASSAN
ANCHORAGE, ALASKA EEIS JOB #205038.BG1

revisions

released for
PERMIT

release date
06-24-05

sheet
C2.0

EEIS CONSULTING ENGINEERS, INC.
P.O. Box 92169 Anchorage, Alaska 99509-2169 (907)258-3231

STATE OF ALASKA
49TH
Richard C. Burton
CE-5031
REGISTERED PROFESSIONAL ENGINEER

APPENDIX C
CONSTRUCTION COST ESTIMATE

ITEM DESCRIPTION	COST	COMMENT
1. TANK FARM AND BULK TRANSFER AREA		
A. TANK FARM SITE AND TRUCK FILL FOUNDATION	$16,625	
B. TANKS	$85,600	
C. PIPING SYSTEMS	$50,355	
D. POWER, CONTROLS, ETC.	$30,180	
E. MISCELLANEOUS	$80,100	
F. OVERHEAD	$55,980	
G. FREIGHT	$44,655	
2. TANK FARM AND BULK TRANSFER AREA SUB-TOTAL	**$363,495**	
3. DESIGN AND CONSTRUCTION ADMINISTRATION	$75,000	
4. CONSTRUCTION MANAGEMENT	$75,000	
5. OVERALL PROJECT SUB-TOTAL	**$513,495**	
6. CONTINGENCY	$102,699	20%
7. INSURANCE	$13,125	
8. TOTAL ESTIMATED PROJECT COST	**$629,000**	
9. TOTAL STORAGE CAPACITY		10,000 GAL. NOMINAL CAPACITY
10. PROJECT COST PER GALLON OF GROSS CAPACITY	**$62.90**	Benchmark- $14.00 to $18.00 per gallon
11. PROJECT COST PER PARTICIPANT City of Kasaan	$629,000	100.0%

ITEM	QUAN	UNIT	UNIT COST	MATL COST	UNIT HRS	LAB HRS	LAB RATE	LABOR COST	CONTR COST	FREIGHT COST	TOTAL COST	UNIT WT	TOTAL WT (#)
FOUNDATION & SITE													
Clear and Prep Site	1	lump	$0	$0	80	80	$60	$4,800			$4,800		0
Gravel Pads	50	cu. yd.	$100.00	$5,000	0.25	13	$60	$750			$5,750		0
6' Chain-Link Fence	150	lf	$10.50	$1,575	0.50	75	$60	$4,500			$6,075	15	2250
TANKS													
5,000 Gal Protected Tank	2	ea	$30,000	$60,000	0	0	$60	$0			$60,000	22000	44000
Emergency Vents	4	ea	$300	$1,200	2	8	$60	$480			$1,680	75	300
Pressure/Vacuum/Whistle Vents	2	ea	$250	$500	2	4	$60	$240			$740	20	40
Clock Type Gauges	2	ea	$280	$560	2	4	$60	$240			$800	20	40
3" Fill Limiters	2	ea	$800	$1,600	4	8	$60	$480			$2,080	20	40
Dual Product Dispenser	1	ea	$6,000	$6,000	5	5	$60	$300			$6,300	100	100
Dispenser Enclosure	1	ea	$6,000	$6,000	40	40	$60	$2,400			$8,400	1200	1200
Place Tanks	2	ea	$0	$0	30	60	$60	$3,600			$3,600		0
Pipe Mounting Brackets	1	lump	$2,000	$2,000	0	0	$60	$0			$2,000	1000	1000
PUMP / PIPING SYSTEM													
3" Sch 80 Welded Above Grade	80	lin. ft.	$15.00	$1,200	0.75	60	$80	$4,800			$6,000	10	800
2" Sch 80 Welded Buried	200	lin. ft.	$10.00	$2,000	0.50	100	$80	$8,000			$10,000	5	1000
Misc Strut & Pipe Clamps	1	lump	$1,000	$1,000	40	40	$60	$2,400			$3,400	400	400
Flexible Connectors	12	ea	$125	$1,500	1	12	$60	$720			$2,220	10	120
Fuel Transfer Cabinet	1	ea	$5,000	$5,000	40	40	$60	$2,400			$7,400	1500	1500
Dry Break Couplings	3	pair	$800	$2,400	2	6	$60	$360			$2,760	10	30
Dispenser Nozzles / Flow Restricters	2	ea	$200	$400	2	4	$60	$240			$640	15	30
Manifold & Fuel Transfer Fittings	1	lump	$2,000	$2,000	80	80	$60	$4,800			$6,800	1500	1500
Grounding Reel	1	ea	$200	$200	2	2	$60	$120			$320	20	20
3" Flanged Check Valves	2	ea	$200	$400	2	4	$60	$240			$640	50	100
2" Flanged Check Valves	2	ea	$180	$360	2	4	$60	$240			$600	35	70
2" Flanged Ball Valves	8	ea	$175	$1,400	2	16	$60	$960			$2,360	30	240
3" Flanged Ball Valves	2	ea	$225	$450	2	4	$60	$240			$690	50	100
Misc Threaded Ball Valves	1	lump	$200	$200	10	10	$60	$600			$800	50	50
3" Strainers	2	ea	$500	$1,000	2	4	$60	$240			$1,240	50	100
1" Flanged PRV	3	ea	$475	$1,425	1	3	$60	$180			$1,605	10	30
Transfer Pumps	2	ea	$1,200	$2,400	4	8	$60	$480			$2,880	100	200

ITEM	QUAN	UNIT	UNIT COST	MATL COST	UNIT HRS	LAB HRS	LAB RATE	LABOR COST	CONTR COST	FREIGHT COST	TOTAL COST	UNIT WT	TOTAL WT (#)
POWER, CONTROLS, ETC.													
Control Panels	1	ea	$10,000	$10,000	40	40	$80	$3,200			$13,200	100	100
Area Lighting	1	lump	$6,000	$6,000	60	60	$80	$4,800			$10,800	300	300
Conduit, Conductors, & Devices	1	lump	$1,500	$1,500	40	40	$80	$3,200			$4,700	1500	1500
Meter	1	ea	$1,000	$1,000	8	8	$60	$480			$1,480	50	50
MISCELLANEOUS													
Bulk Fuel Transfer Area	1	ea	$45,000	$45,000	180	180	$60	$10,800			$55,800	15000	15000
Signs & Valve Tags	1	lump	$2,000	$2,000	30	30	$60	$1,800			$3,800	100	100
Spill Response Supplies	1	lump	$15,000	$15,000	0	0	$60	$0			$15,000	600	600
Misc Hardware	1	lump	$1,000	$1,000	0	0	$60	$0			$1,000	500	500
Misc Tools & Safety Gear	1	lump	$2,500	$2,500	0	0	$60	$0			$2,500	500	500
Welding Rod, Gases, Etc.	1	lump	$2,000	$2,000	0	0	$60	$0			$2,000	600	600
OVERHEAD													
Surveying/ ROW Legal Work	1	lump							$5,000		$5,000		0
Rent/Heavy Equip	1	lump							$20,000		$20,000		0
Welder/Compr/Misc Tool Rent	1	lump							$5,000		$5,000		0
Commission System & Training	1	lump			30	30	$80	$2,400			$2,400		0
Crew Travel Time	1	lump			60	60	$80	$4,800			$4,800		0
Crew Airfares	2	R.Trps							$5,000		$5,000		0
Crew Per Diem	90	mn.dy	$42						$3,780		$3,780		0
Lodging	1	mo.							$10,000		$10,000		0
FREIGHT													74,510
Barge Freight Seattle - Craig	74510	lb.	$0.50							$37,255			
Truck Freight Craig to Kasaan	4	Single Trailer Loads	$600							$2,400			
Misc Small Freight	1	lump	$5,000							$5,000			
TANK FARM SUB TOTAL				$193,770		1,142		$76,290	$48,780	$44,655	**$363,495**		

APPENDIX D
CONCEPTUAL DESIGN DRAWINGS

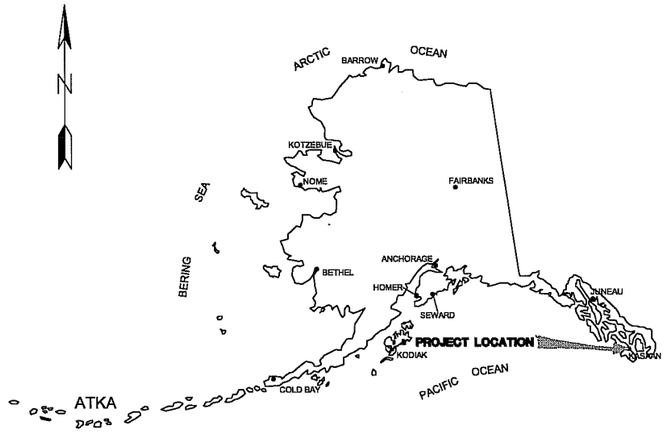

State of Alaska
Department of Community and Economic Development
AIDEA/AEA
Rural Energy Group
813 West Northern Lights Blvd.
Anchorage, Alaska 99503

ALASKA ENERGY AUTHORITY

CITY OF KASAAN

BULK FUEL UPGRADES CONCEPT DRAWINGS

JUNE 2005

SHEET INDEX

Dwg. No.	Title
GENERAL	
	COVER
G-1	NOTES, LEGENDS AND ABBREVIATIONS
CIVIL	
C-1	BULK FUEL FACILITY SITE PLAN
C-2	PIPING SCHEMATIC
C-3	TRUCK OFF-LOAD SECONDARY CONTAINMENT
C-4	5,000 GALLON DOUBLE WALL TANK INSTALLATION DETAILS
C-5	DUAL PRODUCT DIPSENSER
C-6	MISCELLANEOUS DETAILS

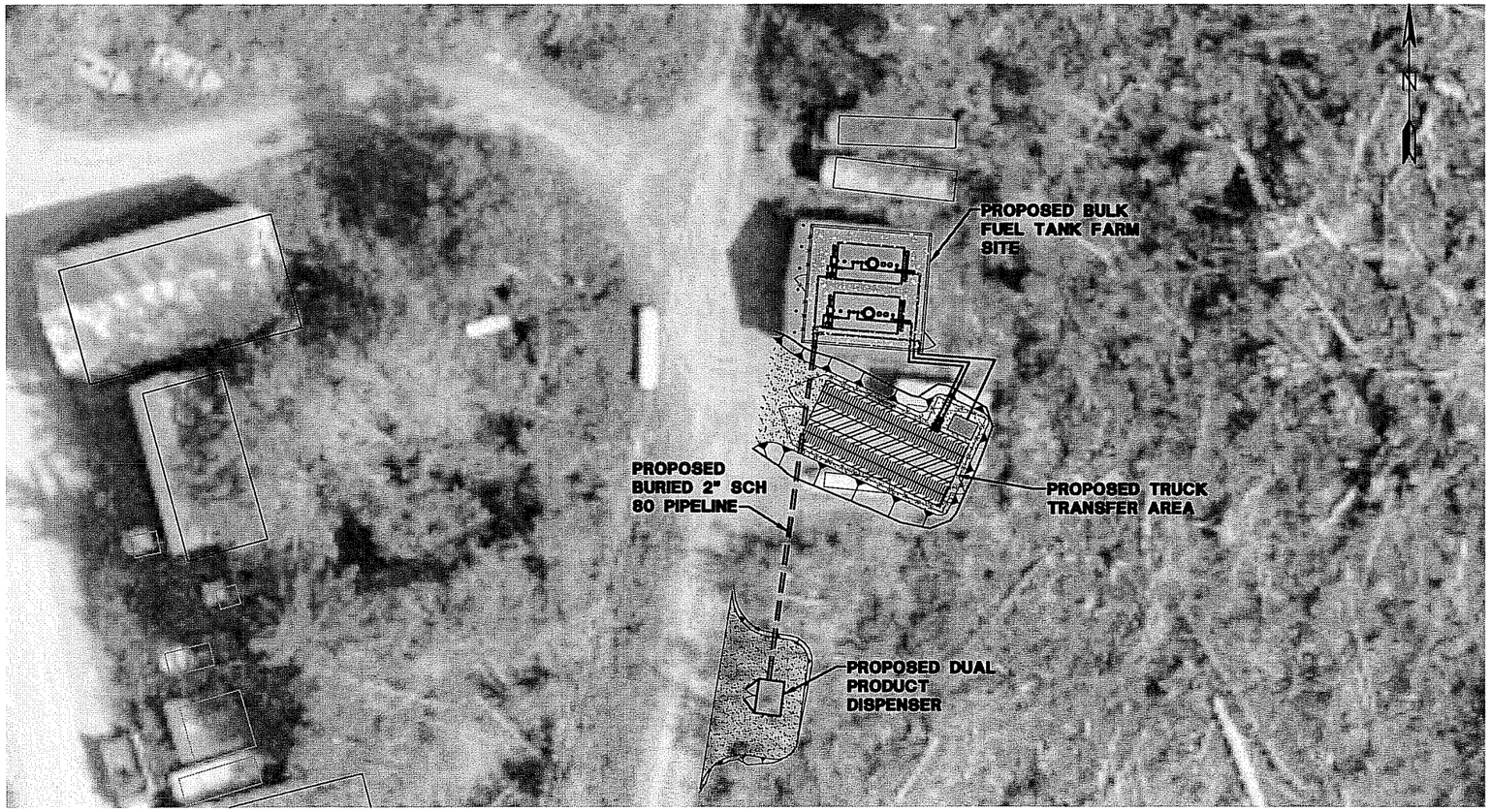

PROJECT AREA MAP

Project Number	(Consultant) 30401.19	(AEA)
AEA Project Manager	BRYAN CAREY, P.E.	
Construction Manager	-	
Final Design	(Date)	
Fire Marshal Approval	(Date)	
Construction Period	(From)	(To)
As-Builts	(Date)	

CRW ENGINEERING GROUP, LLC
3940 Arctic Blvd. Suite 300
Anchorage, Alaska 99503
PHONE: (907) 562-3252
FAX: (907) 561-2273

PRELIMINARY NOT FOR CONSTRUCTION

File: 30401.19\CADD\Drawings\CDR DRAWINGS

PROJECT SCOPE

THIS PROJECT PROVIDES FOR THE CONSTRUCTION OF BULK FUEL UPGRADES AT THE CITY OF KASAAN, ALASKA. SPECIFIC ACTIVITIES WILL INCLUDE THE CONSTRUCTION AND INSTALLATION OF:

- TWO NEW 5,000 GALLON HORIZONTAL, PROTECTED ABOVEGROUND STORAGE TANKS COMPLETE WITH PIPING AND APPURTENANCES.
- ONE NEW DUAL PRODUCT DISPENSER
- A BULK FUEL TRANSFER SECONDARY CONTAINMENT AREA WITH 2,500 GALLON CAPACITY FOR COMMERCIAL FUEL DELIVERY TRUCKS.
- ALL EPA REQUIRED SPILL CONTINGENCY AND RESPONSE EQUIPMENT.

GENERAL NOTES

1. THE CONSTRUCTION MANAGER SHALL PROTECT ALL ITEMS NOT SCHEDULED FOR DEMOLITION DURING CONSTRUCTION. DISTURBED AREAS SHALL BE RESTORED TO PRE-CONSTRUCTION CONDITION.

2. ALL EXISTING UTILITIES MAY NOT BE SHOWN ON THESE PLANS. THE CONSTRUCTION MANAGER SHALL CONSULT WITH THE APPROPRIATE UTILITY ORGANIZATIONS TO VERIFY AND LOCATE UTILITIES PRIOR TO CONSTRUCTION.

3. IT IS THE RESPONSIBILITY OF THE CONSTRUCTION MANAGER TO DETERMINE APPROPRIATE TEMPORARY CUT SLOPES OR SHORING FOR EXCAVATIONS AND TRENCHES FOR SITE SOILS, GROUNDWATER AND RUNOFF CONDITIONS AND SURFACE LOADING CONDITIONS. THE CONSTRUCTION MANAGER MUST COMPLY WITH APPLICABLE FEDERAL AND STATE OSHA REGULATIONS. THE CONSTRUCTION MANAGER SHALL MAINTAIN ALL SIGNS, BARRICADES, AND WARNING LIGHTS AND OTHER PROTECTIVE DEVICES NECESSARY FOR SAFETY.

4. THE CONSTRUCTION MANAGER SHALL BE RESPONSIBLE FOR COORDINATING HIS WORK WITH EXISTING FACILITY OPERATORS, OTHER CONTRACTORS, SUBCONTRACTORS, THE COMMUNITY ASSOCIATION, AND STATE AND FEDERAL AUTHORITIES.

5. THE DRAWINGS ARE DIAGRAMMATIC AND DO NOT NECESSARILY SHOW ALL FEATURES OF THE REQUIRED WORK. PROVIDE ALL EQUIPMENT AND MATERIALS REQUIRED FOR A COMPLETE SYSTEM. VERIFY EXISTING FIELD CONDITIONS PRIOR TO STARTING CONSTRUCTION. IMMEDIATELY CONTACT THE ENGINEER FOR CLARIFICATION OF QUESTIONABLE ITEMS OR APPARENT CONFLICTS.

6. ALL ITEMS TO BE INSTALLED ARE NEW UNLESS SPECIFICALLY INDICATED AS EXISTING. INSTALL ALL MATERIALS AND EQUIPMENT IAW MANUFACTURERS RECOMMENDATIONS, INSTRUCTIONS, AND INSTALLATION DRAWINGS, UNLESS OTHERWISE INDICATED ON THE DRAWINGS.

7. THE SPECIFICATION OF A NAME BRAND PRODUCT, OR APPROVED EQUAL IS PROVIDED MERELY TO ESTABLISH THE LEVEL OF QUALITY OF MATERIALS AND EQUIPMENT REQUIRED AND IS NOT A PRODUCT ENDORSEMENT. **SUBMIT ANY PROPOSED SUBSTITUTIONS IN WRITING TO THE ENGINEER FOR REVIEW AND APPROVAL PRIOR TO PROCUREMENT.**

8. FACILITY DESIGN IS IN ACCORDANCE WITH THE 2000 INTERNATIONAL FIRE CODE, STATE OF ALASKA FIRE AND SAFETY REGULATIONS ADMINISTRATIVE CODES 13 AAC 50, 13 AAC 55, AND THE MOST RECENT MEMORANDUM OF AGREEMENT BETWEEN THE AEA AND THE STATE OF ALASKA FIRE MARSHALL.

9. CONSTRUCTION MANAGER TO PROVIDE SIGNAGE IAW THE SIGN SCHEDULE (SHEET G2), AND AS IDENTIFIED ELSEWHERE IN THE DRAWINGS.

10. PERFORM WORK WITH SKILLED CRAFTSMEN SPECIALIZED IN SAID WORK. INSTALL ALL MATERIALS IN A NEAT, ORDERLY, AND SECURE FASHION, AS REQUIRED BY THE DRAWINGS AND SPECIFICATIONS AND COMMONLY RECOGNIZED STANDARDS OF GOOD WORKMANSHIP.

11. WHERE PIPE SUPPORTS ARE NOT SHOWN THEY SHALL BE SPACED A MAXIMUM OF 10 FEET ON CENTER IAW THE 2000 IPC.

12. ALL WORK SHALL BE PERFORMED IN ACCORDANCE WITH U.S. ENVIRONMENTAL PROTECTION AGENCY, ALASKA DEPARTMENT OF ENVIRONMENTAL CONSERVATION, AND STATE AND FEDERAL OCCUPATIONAL HEALTH AND SAFETY REGULATIONS.

PROJECT TESTING STARTUP AND COMMISSIONING

1. PRESSURE TEST ALL TANKS AND PIPING IN THE FIELD. FILL OUT AEA PIPELINE PRESSURE TEST REPORT AND DELIVER ORIGINAL TO AEA PROJECT MANAGER. VERIFY PROPER FUNCTION OF ALL PRESSURE RELIEF DEVICES.

2. UPON FILLING OF TANKS VERIFY PRODUCT LEVEL WITH GAUGING ROD OR TAPE AND CALIBRATE ALL TANK GAUGES.

3. CHECK ALL PUMPS FOR PROPER ROTATION.

4. CHECK ALL CONTROL AND ALARM FUNCTIONS. MANIPULATE FLOATS TO SIMULATE HIGH CONDITIONS. VERIFY OPERATION OF ALL SIGNAL LAMPS AND HORNS. CHECK AREA LIGHTING AND VERIFY OPERATION OF PHOTOCELL CONTROLS.

5. VERIFY ALL SIGNS, PLACARDS, AND VALVE TAGS ARE PROPERLY LOCATED. INSTALL KEYED ALIKE PADLOCKS ON ALL VALVES AND FENCING GATES.

6. TRAIN LOCAL OPERATORS IN OPERATION AND MAINTENANCE OF ALL SYSTEMS. PLACE SPARE PARTS AND SPILL RESPONSE SUPPLIES IN DESIGNATED LOCATION.

ABBREVIATIONS

ADEC	ALASKA DEPARTMENT OF ENVIRONMENTAL CONSERVATION
ADOT	ALASKA DEPARTMENT OF TRANSPORTATION
AG	ABOVE GROUND
AEA	ALASKA ENERGY AUTHORITY
ALCAP	ALUMINUM SURVEY CAP
ANSI	AMERICAN NATIONAL STANDARDS INSTITUTE
API	AMERICAN PETROLEUM INSTITUTE
APPROX	APPROXIMATE
ASTM	AMERICAN SOCIETY FOR TESTING OF MATERIALS
AST	ABOVE GROUND STORAGE TANK
AWS	AMERICAN WELDING SOCIETY
BLDG	BUILDING
CI	CAST IRON
CITY	CITY OF KASAAN
CL	CENTERLINE
CMP	CORRUGATED METAL PIPE
CRIT	CRITICAL
DEMO	DEMOLISH
DFT	DRY FILM THICKNESS
DF	DIESEL FUEL
DIA	DIAMETER
DRAWINGS	BULK FUEL UPGRADES DRAWINGS
DWG	DRAWING
E	EAST
EA	EACH
EG	EXISTING GRADE
EL	ELEVATION
ELEC	ELECTRIC
EPA	U.S. ENVIRONMENTAL PROTECTION AGENCY
ENGINEER	CRW ENGINEERING GROUP, LLC
E-VENT	EMERGENCY VENT
F	FAHRENHEIT
FF	FINISH FLOOR ELEV.
FG	FINISH GRADE
FOR	FUEL OIL RETURN
FOS	FUEL OIL SUPPLY
FPT	FEMALE PIPE THREAD
FT	FOOT OR FEET
GA	GAUGE
GAL	GALLON
GALV	GALVANIZED
GPM	GALLONS PER MINUTE
HDPE	HIGH DENSITY POLYETHYLENE
HMWPE	HIGH MOLECULAR WEIGHT POLYETHYLENE
HP	HORSE POWER
HR	HOUR
HYD	HYDRANT
IAW	IN ACCORDANCE WITH
IBC	INTERNATIONAL BUILDING CODE
ID	INSIDE DIAMETER
IFC	INTERNATIONAL FIRE CODE
IPC	INTERNATIONAL PLUMBING CODE
LF	LINEAR FEET
LB	POUND
M	METERS
MAX	MAXIMUM
MIL	0.001 INCH
MIN	MINIMUM
MPT	MALE PIPE THREAD
N	NORTH
NC	NORMALLY CLOSED
NFS	NON FROST SUSCEPTIBLE (SOIL)
NO	NORMALLY OPEN
NPT	NATIONAL PIPE THREAD
NTS	NOT TO SCALE
OAE	OR APPROVED EQUAL
OD	OUTSIDE DIAMETER
OSHA	OCCUPATIONAL SAFETY AND HEALTH ADMINISTRATION
OZ	OUNCE
PCC	PORTLAND CEMENT CONCRETE
PL	PLATE
PRV	PRESSURE RELIEF VALVE
PSF	POUNDS PER SQUARE FOOT
PSI	POUNDS PER SQUARE INCH
PVI	POINT OF VERTICAL INTERSECTION
R	RADIUS
RF	RAISED FACE
S	SEWER
SCH	SCHEDULE
SHPO	STATE HISTORIC PRESERVATION OFFICE
SIM	SIMILAR
SPEC	SPECIFICATION
SQ	SQUARE
SS	STAINLESS STEEL
SSPC	STEEL STRUCTURES PAINTING COUNCIL
STA	STATION
SY	SQUARE YARD
TBM	TEMPORARY BENCH MARK
TS	TUBE STEEL
TYP	TYPICAL
UG	UNDER GROUND
UL	UNDERWRITERS LABORATORY
UST	UNDERGROUND STORAGE TANK
W/	WITH
W	WATER
XFRMR	PAD MOUNT ELECTRICAL TRANSFORMER

EXISTING FUEL TANKS AND PIPING

1. EXISTING TANKS WHICH ARE REPLACED AS A RESULT OF THIS PROJECT SHALL BE DISCONNECTED FROM ALL PIPELINES, DRAINED OF PRODUCT, BLIND FLANGED AND TAKEN OUT OF SERVICE IN ACCORDANCE WITH CURRENT AEA POLICY AND ALL APPLICABLE STATE AND FEDERAL REGULATIONS.

2. ALL PIPING THAT IS BEING ABANDONED SHALL BE DRAINED AND PURGED. REMOVE AND DISPOSE OF ABOVE GRADE PIPING; BURIED PIPING TO BE ABANDONED IN PLACE.

PRELIMINARY NOT FOR CONSTRUCTION

CIVIL LEGEND

	BOLLARD
	PROPERTY BOUNDARY
	CENTERLINE
	CULVERT
	DITCH LINE/DRAINAGE SWALE
2%	DRAINAGE DIRECTION & SLOPE
	EDGE OF TRAVELED WAY
	FILL SLOPE
	CUT SLOPE
	FENCE LINE
	FIRE EXTINGUISHER
20	GROUND ELEVATION CONTOURS
	REBAR
PP	POWER POLE W/STREET LIGHT
9	INFORMATION / WARNING SIGN
5	SHEET NOTE
	SURVEY MONUMENT
	TEST PIT
	TOE OF FILL SLOPE
XXX	FINISH GRADE ELEVATION
	ANTI-SIPHON VALVE
	BACK PRESSURE VALVE
	BALL VALVE
	CHECK VALVE
	ELBOW UP/DOWN
F	FILTER
	FLEXIBLE CONNECTOR (DETAIL)
	FLEX CONNECTOR (SCHEMATIC)
	GATE VALVE
	PRESSURE RELIEF VALVE
	PRESSURE TEST TAP
	REDUCER
	TEE DOWN
	TEE UP
	TRANSFER PUMP
	WYE STRAINER
	DRY-BREAK QUICK COUPLING
	SUBMERSIBLE PUMP

UTILITY LINE/PIPELINE DESIGNATIONS

E	ELECTRIC	———#———	UNDERGROUND UTILITY LINE/PIPELINE: EXISTING
F	FUEL	———#———	UNDERGROUND UTILITY LINE/PIPELINE: PROPOSED
S	SANITARY SEWER	———#———	ABOVEGROUND UTILITY LINE/PIPELINE: EXISTING
T	TELEPHONE	———#———	ABOVEGROUND UTILITY LINE/PIPELINE: PROPOSED
W	WATER		

DETAIL/SECTION REFERENCES

DETAIL SYMBOL

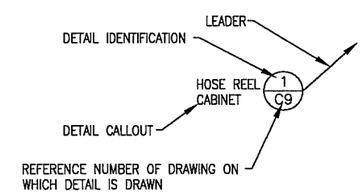

SECTION SYMBOL

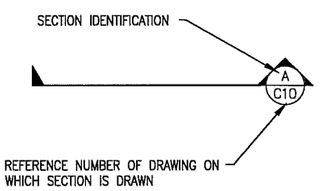

State of Alaska
Department of Community and Economic Development
AIDEA/AEA
Rural Energy Group
813 West Northern Lights Blvd.
Anchorage, Alaska 99503
ALASKA ENERGY AUTHORITY

CRW ENGINEERING GROUP, LLC
3940 ARCTIC BLVD. SUITE 300
ANCHORAGE, ALASKA 99503
PHONE: (907) 562-3252
FAX: (907) 561-2273

KASAAN, ALASKA

BULK FUEL UPGRADES

NOTES, LEGEND AND ABBREVIATIONS

REV	DESCRIPTION	BY	DATE

Project No. 30401.19
Date 6/05
Designed KRH
Drawn SOK
Approved JVS

Sheet No. G1

File: 30401.19\CADD\CDR Drawings

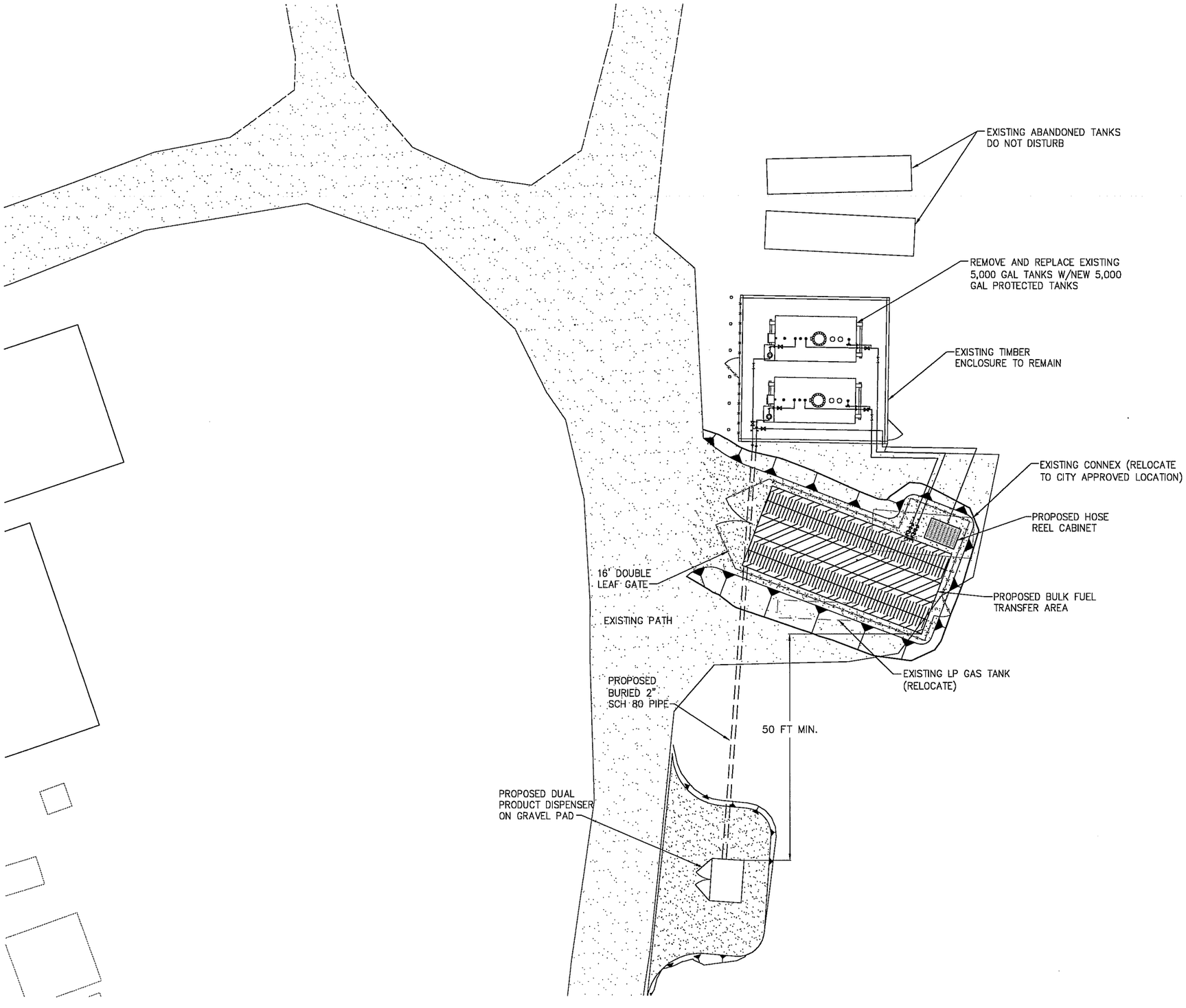

PROJECT SITE PLAN

PRELIMINARY
NOT FOR
CONSTRUCTION

10 0 10 20
SCALE IN FEET

File: 30401.19\CADD\Drawings\CDR DRAWINGS

State of Alaska
Department of Community
and Economic Development
AIDEA/AEA
Rural Energy Group
813 West Northern Lights Blvd.
Anchorage, Alaska 99503

ALASKA ENERGY AUTHORITY

CRW ENGINEERING GROUP, LLC
3940 ARCTIC BLVD. SUITE 300
ANCHORAGE, ALASKA 99503
PHONE: (907) 562-3252
FAX: (907) 561-2273

KASAAN, ALASKA

BULK FUEL UPGRADES

BULK FUEL FACILITY SITE PLAN

REV	DESCRIPTION	BY	DATE

Project No. 30401.19
Date 6/05
Designed KRH
Drawn SGK
Approved JVS

Sheet No. C1
SHEET OF

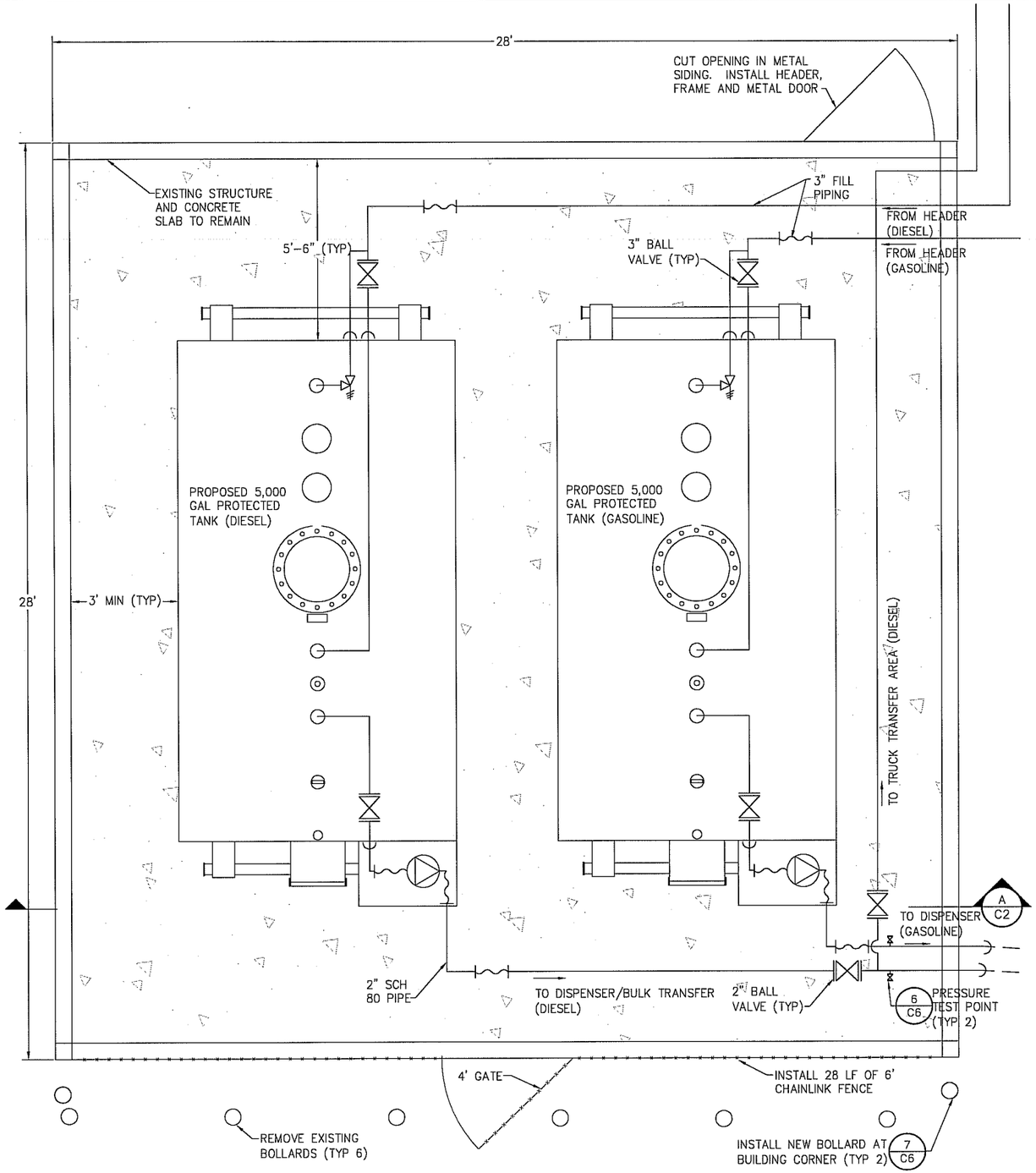

1 C2 **BULK FUEL FACILITY - PIPING SCHEMATIC**

SCALE IN FEET

1 0 1 2

PRELIMINARY NOT FOR CONSTRUCTION

TANK SCHEDULE (CAPACITY IN GALLONS)								
TANK #	NEW OWNER	CLASS	TANK SIZE	CATEGORY	TYPE	#1 DIESEL GROSS	#2 DIESEL GROSS	GASOLINE GROSS
T1	CITY	PROTECTED	5,000	NEW	DISPENSING	5,000	—	—
T2	CITY	PROTECTED	5,000	NEW	DISPENSING	—	—	5,000
PROJECT TOTAL BY PRODUCT						5,000	0	5,000
PROJECT TOTAL GROSS STORAGE								10,000
PROJECT TOTAL NET STORAGE CAPACITY (90% OF GROSS)								9,000

NOTES:

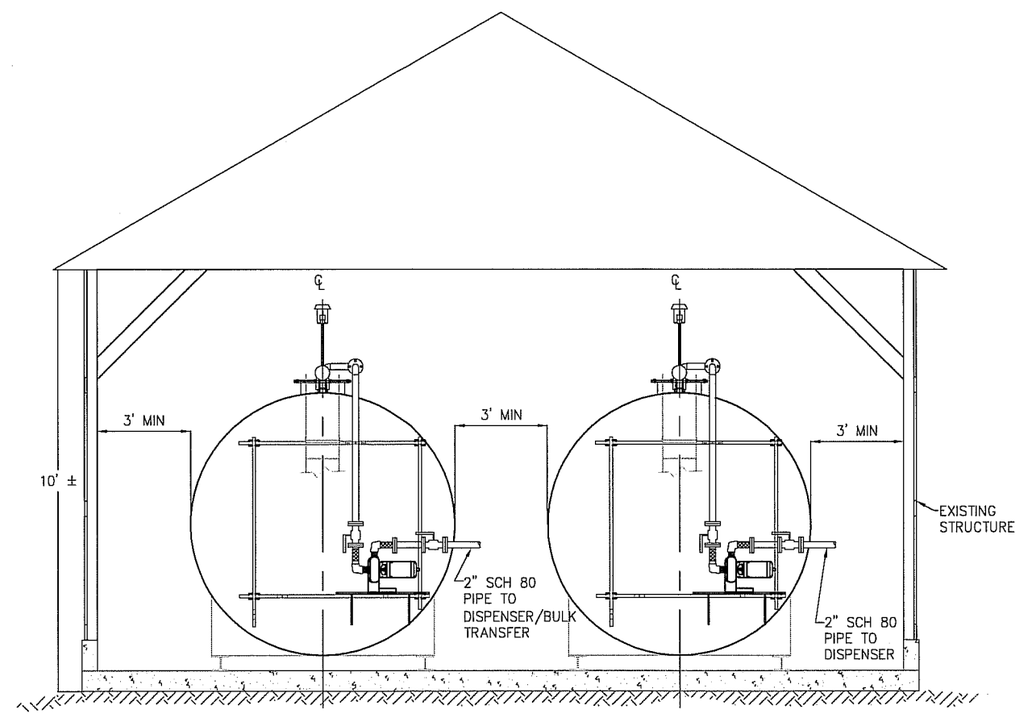

A C2 **BULK FUEL FACILITY SECTION**

SCALE: IN FEET

0 2.5 5

State of Alaska
Department of Community and Economic Development
AIDEA/AEA
Rural Energy Group
813 West Northern Lights Blvd.
Anchorage, Alaska 99503

ALASKA ENERGY AUTHORITY

CRW ENGINEERING GROUP, LLC
3900 ARCTIC BLVD. SUITE 203
ANCHORAGE, ALASKA 99503
PHONE: (907) 562-3252
FAX: (907) 561-2273

KASAAN, ALASKA

BULK FUEL UPGRADES

TANK FARM
PIPING SCHEMATIC

REV	DESCRIPTION	BY	DATE

Project No. 30401.19
Date 6/05
Designed KRH
Drawn SDK
Approved JVS

Sheet No. C2

File: 30401.19\CADD\Drawings\CDR DRAWINGS

BULK TRANSFER AREA NOTES:

THE SECONDARY CONTAINMENT AREA IS SIZED TO ACCOMODATE A FUTURE FUEL TANK TRUCK WITH A MAXIMUM SINGLE TANK VOLUME OF 2,500 GALLONS. THE CONTAINMENT AREA WILL BE VISUALLY MONITORED ON A DAILY BASIS BY CITY PERSONEL. PERIODICALLY, ACCUMULATED STORMWATER WILL BE EMPTIED FROM THE CONTAINMENT BY OPENING THE DRAINPIPE BALL VALVE. ANY SHEEN WILL BE REMOVED BY OIL SORBENT PILLOWS PLACED IN SUMPS. ANY MAJOR RELEASES INTO CONTAINMENT AREA WILL BE PUMPED INTO THE PORTABLE SECONDARY CONTAINMENT BASIN.

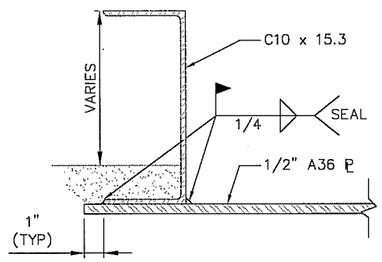

B/C3 **CURB DETAIL**
NTS

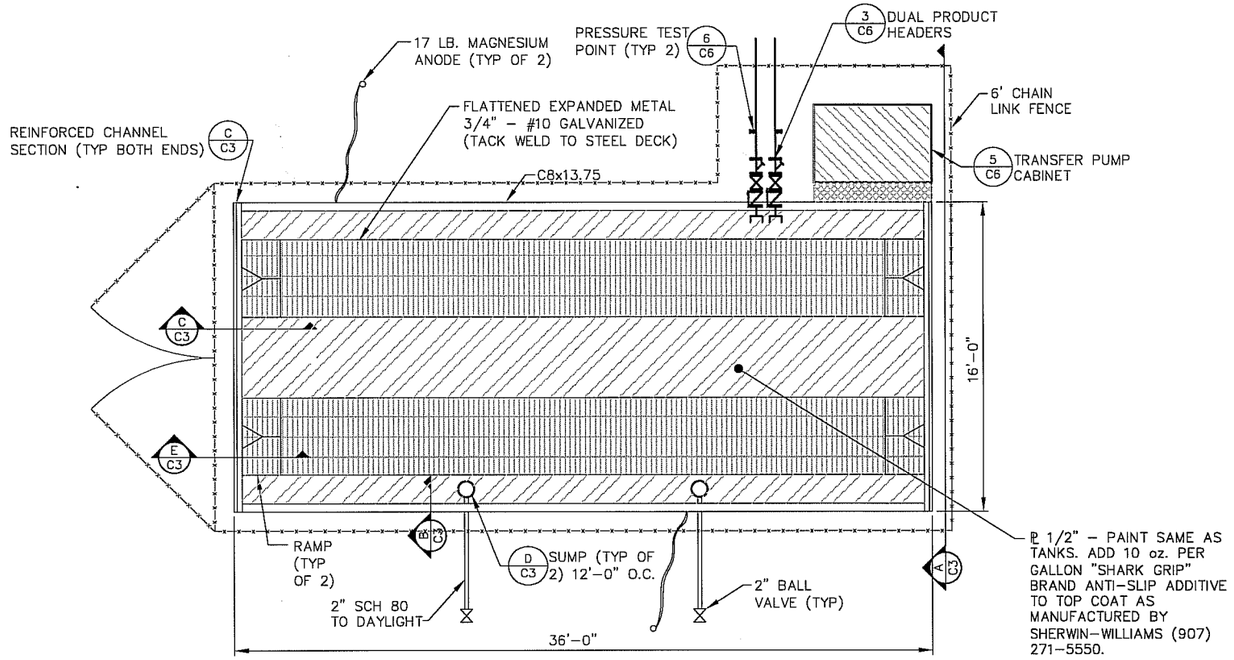

1/C3 **SECONDARY CONTAINMENT - PLAN VIEW**
SCALE: GRAPHIC

8 0 8 16

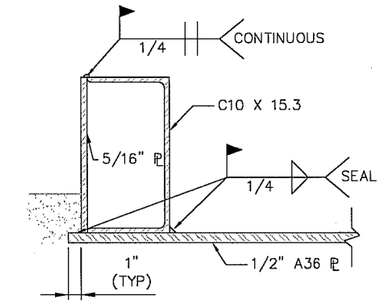

C/C3 **REINFORCED CHANNEL DETAIL**
NTS

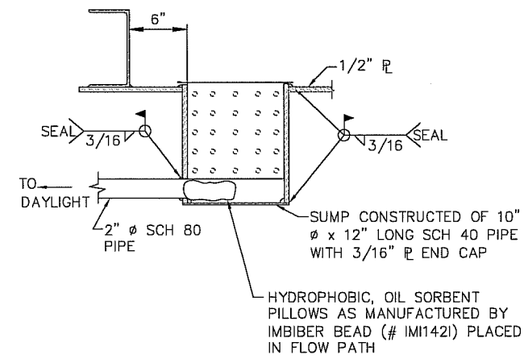

D/C3 **SUMP DETAIL**
NTS

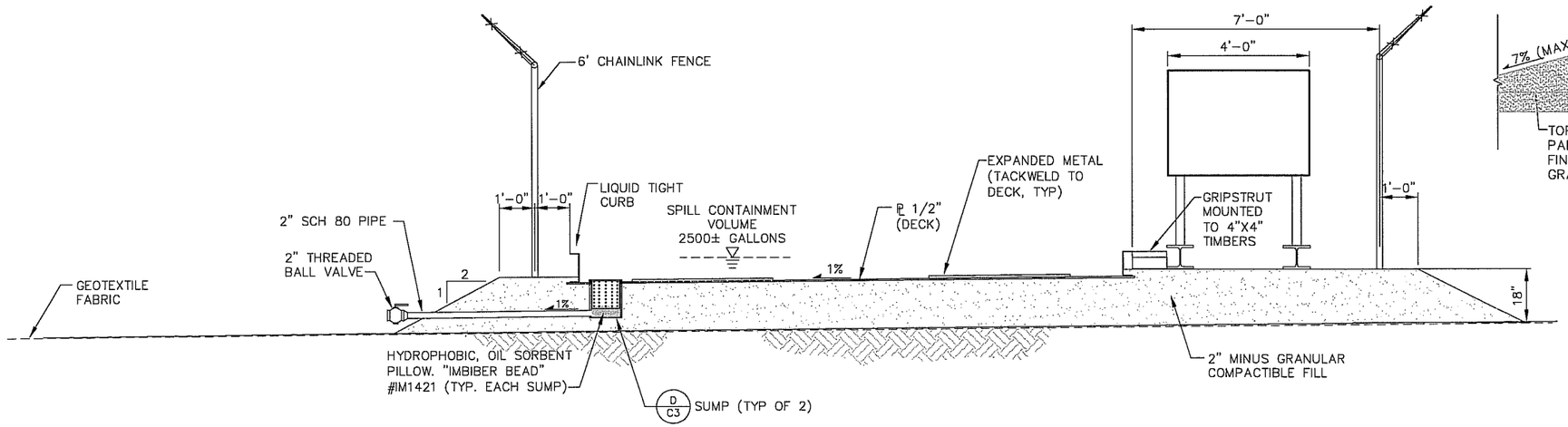

A/C3 **SECONDARY CONTAINMENT - CROSS SECTION**
SCALE: GRAPHIC

2 0 2 4

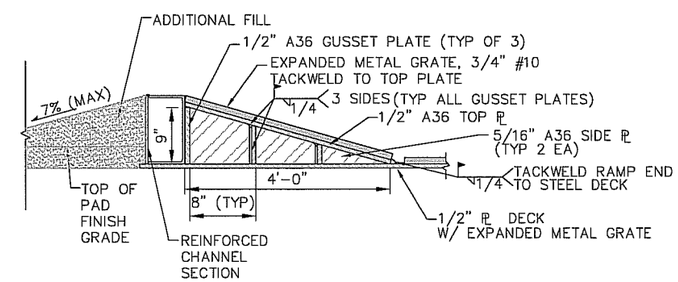

E/C3 **RAMP DETAIL**
NTS

PRELIMINARY NOT FOR CONSTRUCTION

State of Alaska
Department of Community and Economic Development
AIDEA/AEA
Rural Energy Group
813 West Northern Lights Blvd.
Anchorage, Alaska 99503
ALASKA ENERGY AUTHORITY

CRW ENGINEERING GROUP, LLC
3900 ARCTIC BLVD. SUITE 203
ANCHORAGE, ALASKA 99503
PHONE: (907) 562-3252
FAX: (907) 561-2273

KASAAN, ALASKA
BULK FUEL UPGRADES
TRUCK OFF-LOAD SECONDARY CONTAINMENT

REV	DESCRIPTION	BY	DATE

Project No. 30401.19
Date 6/05
Designed KRH
Drawn SDK
Approved JVS

Sheet No. C3

File: 30401.19\CADD\Drawings\CDR DRAWINGS\C3.dwg

GENERAL NOTES:

1. PROVIDE DOUBLE WALL 5,000 GALLON NOMINAL CAPACITY U.L. 2085 LISTED PROTECTED TANK AS SHOWN. MAX. OUTER TANK DIMENSIONS: 8.5' ø X 15'
1. ALL REQUIRED PENETRATIONS, STANDOFFS, PIPE SUPPORTS ETC., SHALL BE BOLT ON OR FACTORY INSTALLED. **FIELD WELDING ON TANKS IS PROHIBITED.**

SPECIFIC NOTES:

1. TRANSFER PUMP
2. 2" BALL VALVE
3. SHOP FABRICATED BOLT ON LADDER W/GRIP-STRUT DECK
4. GAUGE HATCH INSTALLED ON 2"x4" NIPPLE (SECONDARY TANK MONITOR)
5. 1" PRESSURE RELIEF VALVE (75 PSI)
6. CLOCK GAUGE WITH STILLING WELL
7. 2" CHECK VALVE
8. GAUGE HATCH INSTALLED ON 2"x4" NIPPLE
9. WATER DRAW
10. 3" FILL LIMITER
11. FLOAT
12. 3" CHECK VALVE
13. 24" MANHOLE
14. 2" PRESSURE VACUUM VENT WITH WHISTLE ALARM
15. 8" FLANGED E-VENT
16. 8" FLANGED SECONDARY E-VENT
17. 3" BALL VALVE

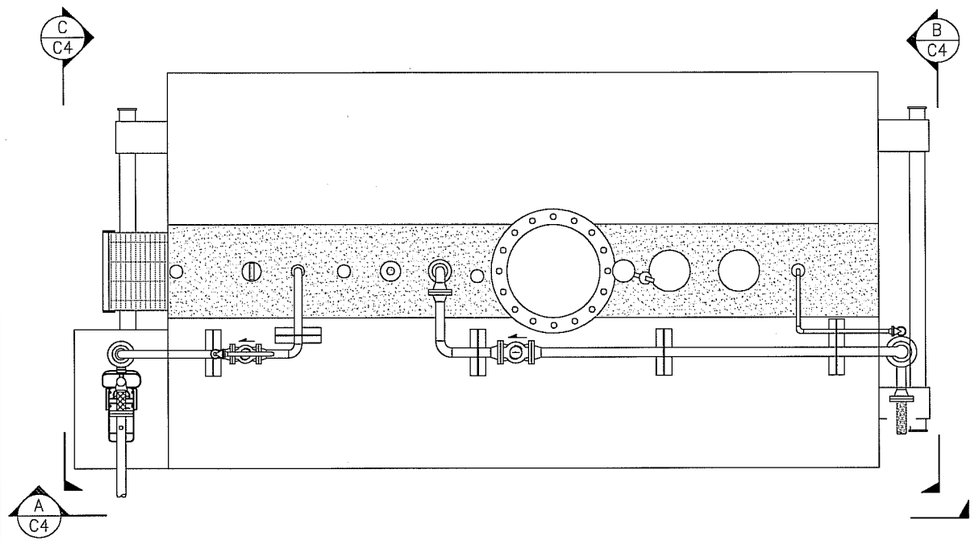

1 / C4 **PLAN - 5,000 GALLON PROTECTED TANK**

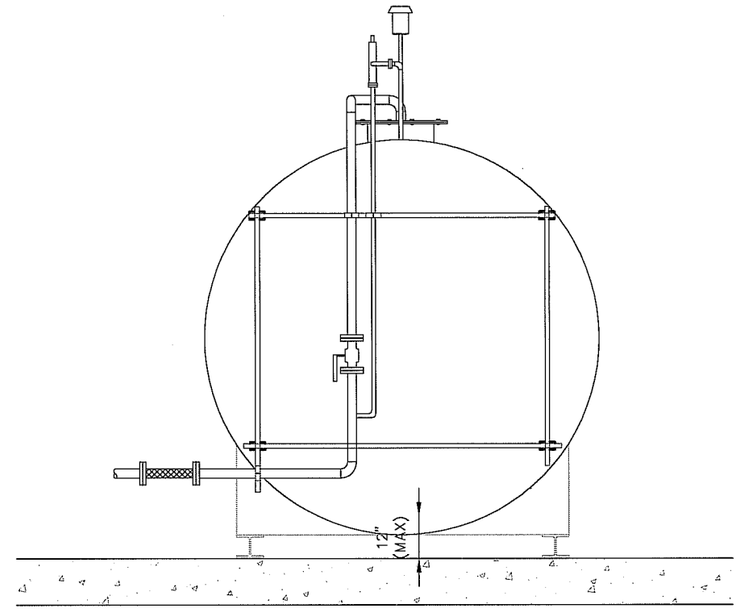

B / C4 **SECTION - 5,000 GALLON PROTECTED TANK**

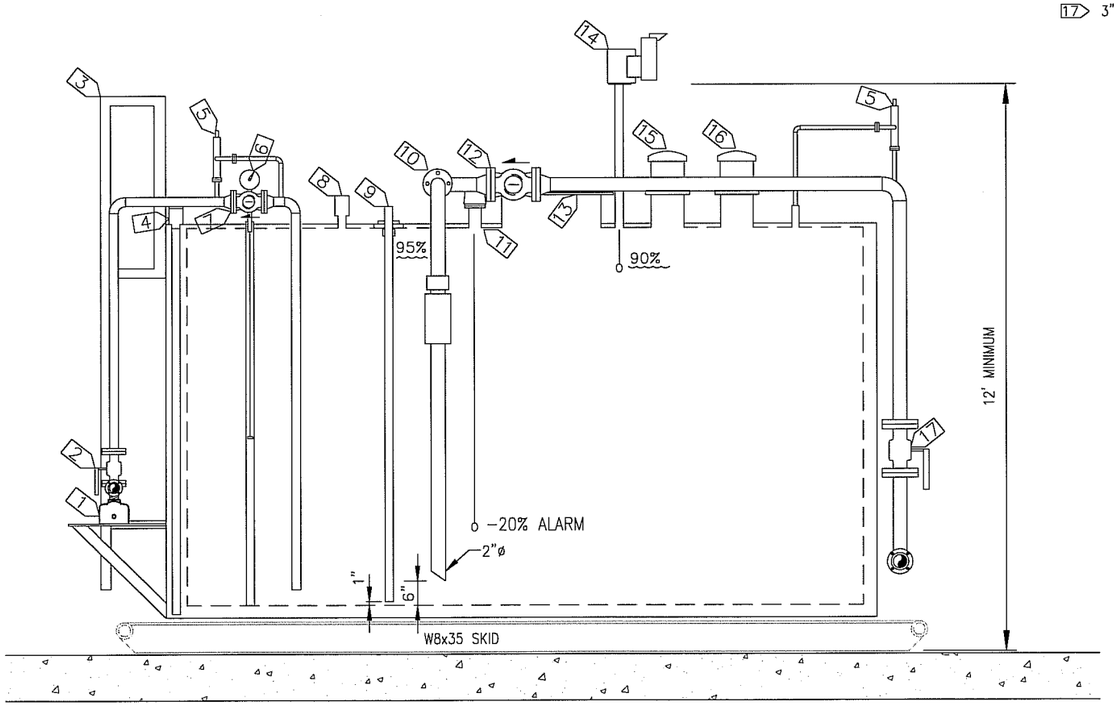

A / C4 **SECTION - 5,000 GALLON PROTECTED TANK**

PRELIMINARY NOT FOR CONSTRUCTION

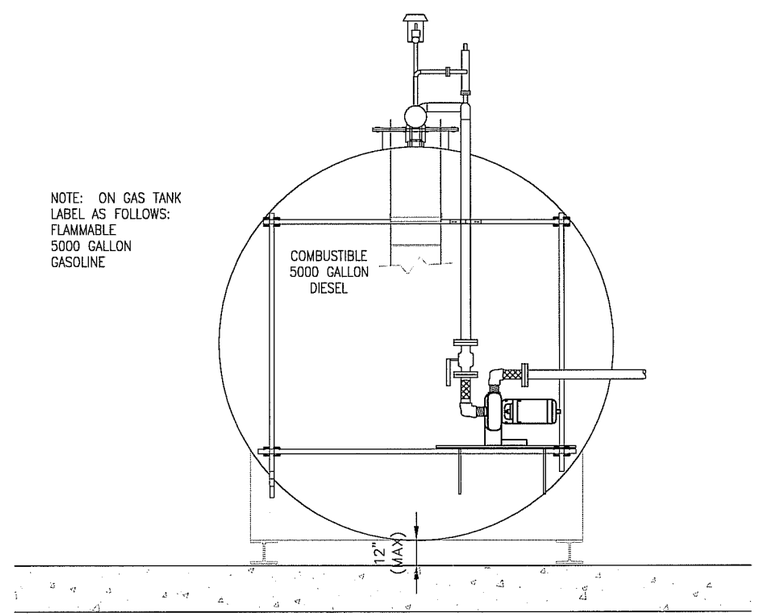

C / C4 **SECTION - 5,000 GALLON PROTECTED TANK**

State of Alaska
Department of Community and Economic Development
AIDEA/AEA
Rural Energy Group
813 West Northern Lights Blvd.
Anchorage, Alaska 99503

ALASKA ENERGY AUTHORITY

CRW ENGINEERING GROUP, LLC
3940 ARCTIC BLVD. SUITE 300
ANCHORAGE, ALASKA 99503
PHONE: (907) 562-3252
FAX: (907) 561-2273

KASAAN, ALASKA

BULK FUEL UPGRADES

5,000 GALLON PROTECTED TANK INSTALLATION DETAILS

REV	DESCRIPTION	BY	DATE
0			

Project No. 30401.19
Date 5/05
Designed KRH
Drawn SOK
Approved JVS

Sheet No. C4

File: 30401.19\CADD\Drawings\CDR DRAWINGS

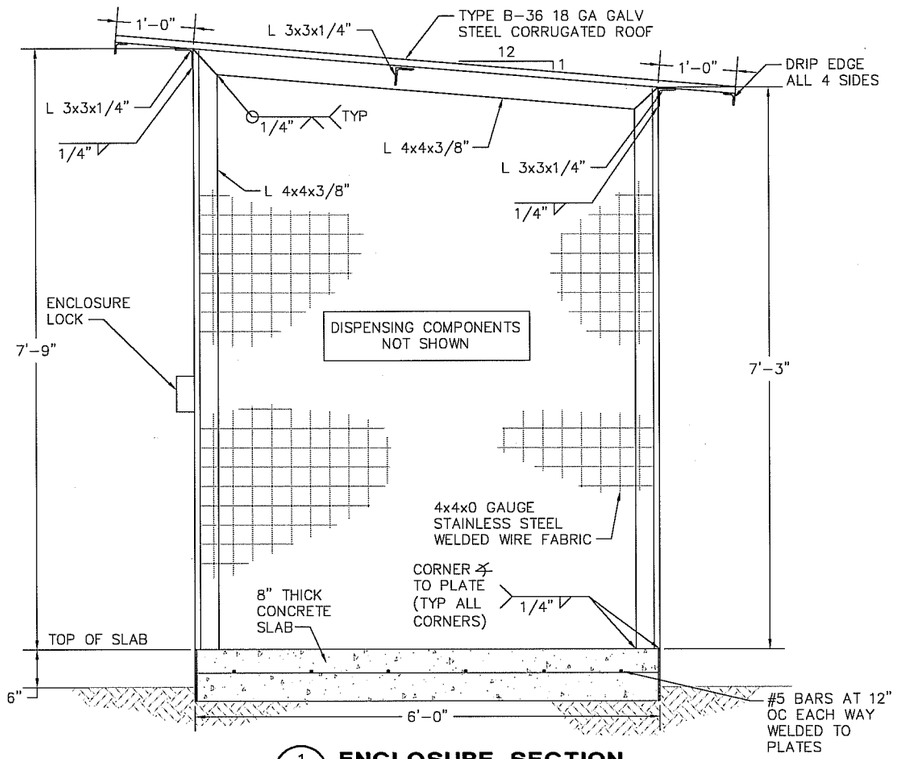

1 / C5 **ENCLOSURE SECTION**
SCALE IN FEET

GRAPHIC SCALE 1 0 .5 1 2

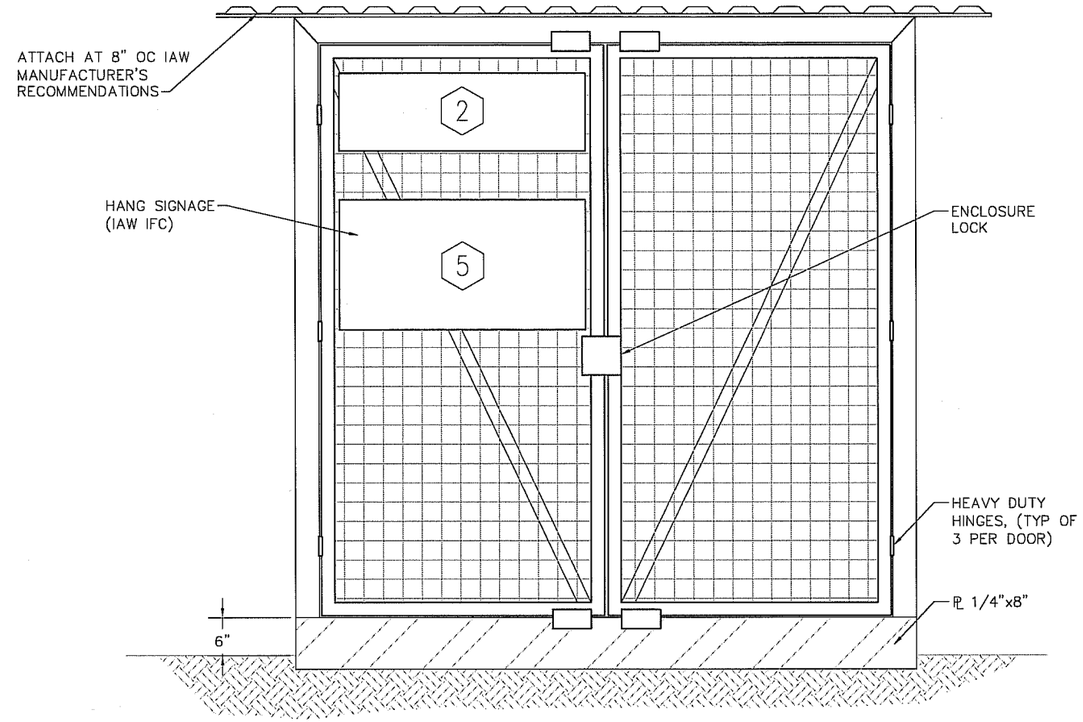

2 / C5 **ENCLOSURE FRONT ELEVATION**
SCALE IN FEET

GRAPHIC SCALE 1 0 .5 1 2

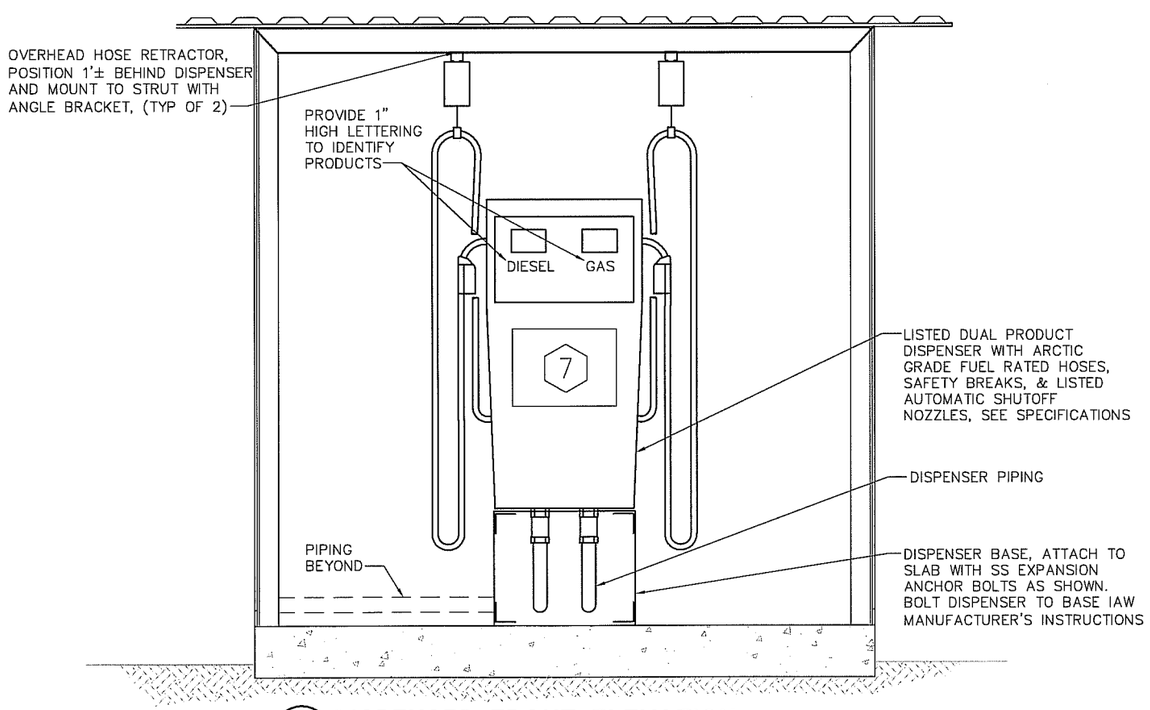

3 / C5 **DISPENSER FRONT ELEVATION**
SCALE IN FEET

GRAPHIC SCALE 1 0 .5 1 2

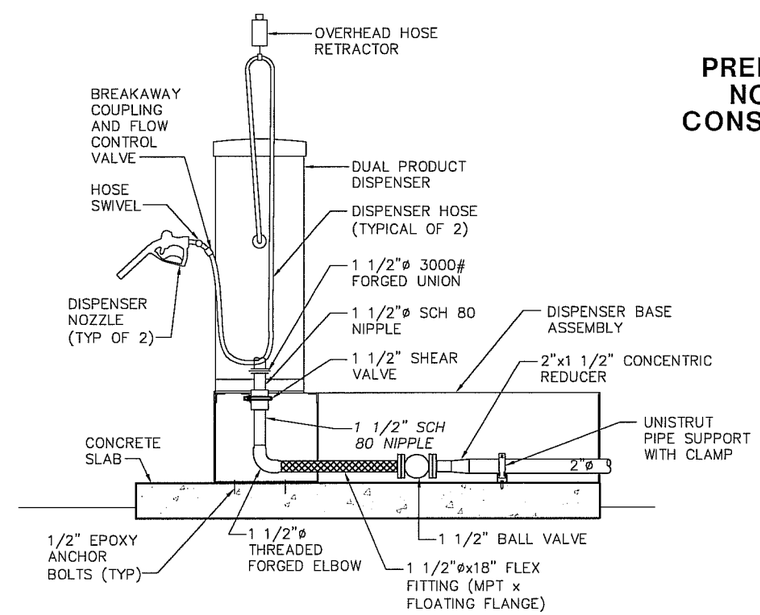

4 / C5 **DISPENSER SIDE ELEVATION**
NOT TO SCALE

PRELIMINARY
NOT FOR
CONSTRUCTION

State of Alaska
Department of Community
and Economic Development
AIDEA/AEA
Rural Energy Group
813 West Northern Lights Blvd.
Anchorage, Alaska 99503
ALASKA ENERGY AUTHORITY

CRW ENGINEERING GROUP, LLC
3900 ARCTIC BLVD. SUITE 203
ANCHORAGE, ALASKA 99503
PHONE: (907) 562-3252
FAX: (907) 561-2273

KASAAN, ALASKA
BULK FUEL UPGRADES
DUAL PRODUCT DISPENSER

REV	DESCRIPTION	BY	DATE

Project No. 30401.19
Date 6/05
Designed KRH
Drawn SDK
Approved JVS

Sheet No. C5

File: 30401.19\CADD\Drawings\CDR DRAWINGS

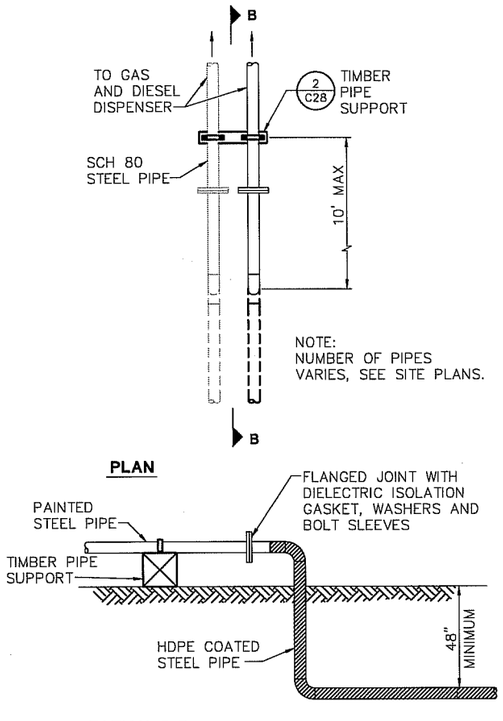

1/C6 DETAIL - VERTICAL TRANSITION

SCALE: NTS

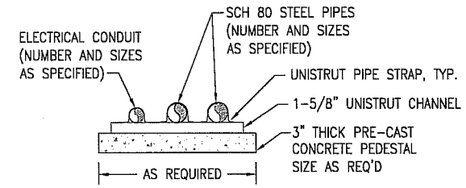

2/C6 CONCRETE PIPE SUPPORT

SCALE: NTS

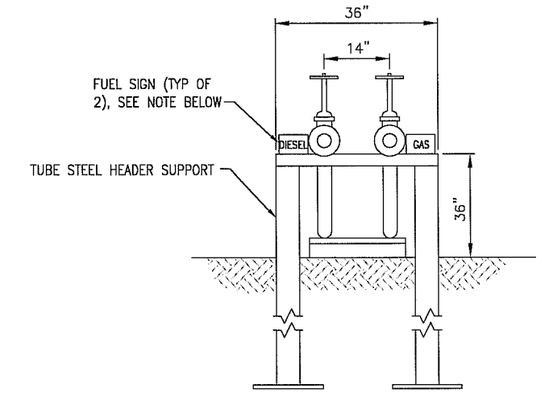

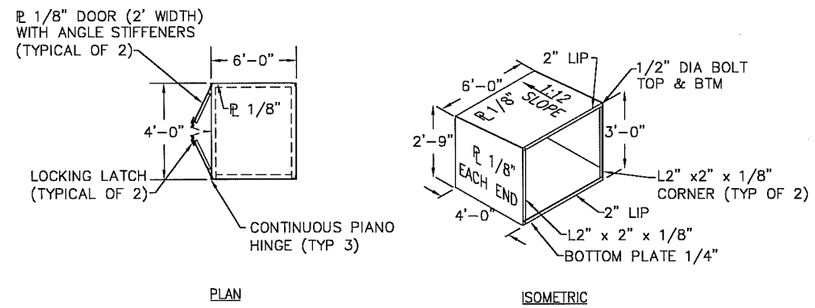

ENCLOSURE NOTES:

1. ALL CONNECTIONS SHALL BE CONTINUOUSLY WELDED, AND FULLY WATER-TIGHT, UNLESS OTHERWISE NOTED.

2. SEE SHEET G3, MATERIAL SPECIFICATIONS, FOR CABINET PAINTING DETAILS.

3. FABRICATE FROM ASTM A-36 STEEL FOR ROLLED SECTIONS, A500 FOR STRUCTURAL TUBING, AND A53 TYPE GRADE B FOR STRUCTURAL PIPES. MAKE ALL CONNECTIONS WITH CONTINUOUS FILLET OR BUTT WELDS. ROUND ALL CORNERS & SHARP EDGES AFTER FABRICATION.

4. THE DESIGN, FABRICATION, AND ERECTION OF ALL STRUCTURAL STEEL SHALL COMPLY WITH THE CURRENT CODE OF STANDARD PRACTICE OF THE AMERICAN INSTITUTE OF STEEL CONSTRUCTION. ALL WELDING TO BE DONE IAW THE CURRENT CODE OF AMERICAN WELDING SOCIETY.

5. ENCLOSURE FABRICATOR SHALL SUBMIT SHOP DRAWINGS PRIOR TO FABRICATION FOR REVIEW AND APPROVAL.

6. ONE ENCLOSURE REQUIRED FOR THIS PROJECT.

4/C6 ENCLOSURE DETAIL

SCALE: NTS

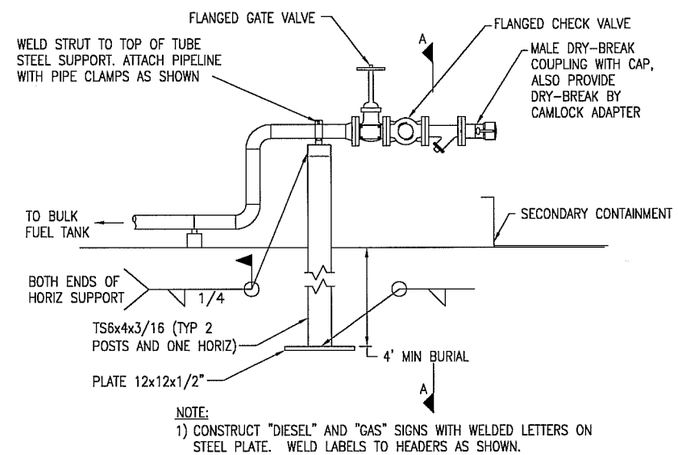

NOTE:
1) CONSTRUCT "DIESEL" AND "GAS" SIGNS WITH WELDED LETTERS ON STEEL PLATE. WELD LABELS TO HEADERS AS SHOWN.

3/C6 TRUCK FILL HEADER DETAIL

SCALE: NTS

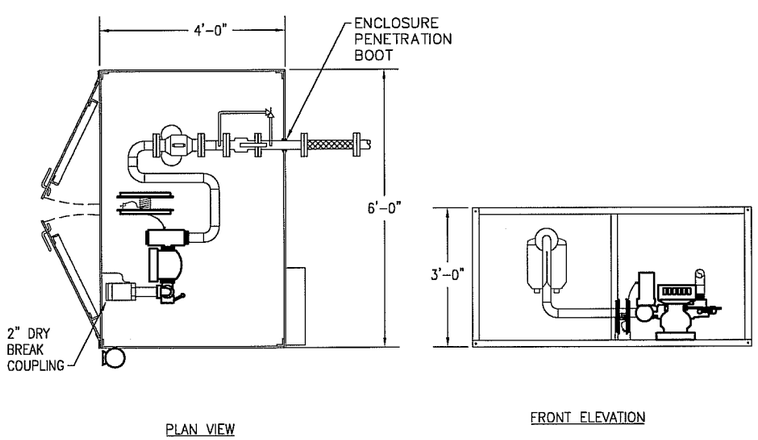

5/C6 TRUCK FILL ENCLOSURE

SCALE: NTS

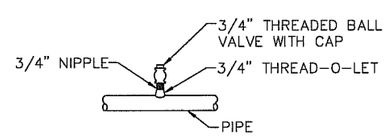

6/C6 PRESSURE TEST CONNECTION

SCALE: NTS

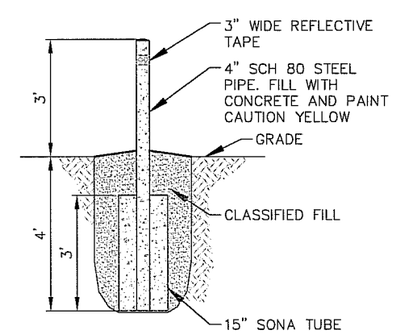

7/C6 DETAIL - BOLLARD

SCALE: NTS

PRELIMINARY NOT FOR CONSTRUCTION

State of Alaska
Department of Community and Economic Development
AIDEA/AEA
Rural Energy Group
813 West Northern Lights Blvd.
Anchorage, Alaska 99503

ALASKA ENERGY AUTHORITY

CRW ENGINEERING GROUP, LLC
3900 ARCTIC BLVD. SUITE 203
ANCHORAGE, ALASKA 99503
PHONE: (907) 562-3252
FAX: (907) 561-2273

KASAAN, ALASKA

BULK FUEL UPGRADES

MISCELLANEOUS PIPING DETAILS

REV	DESCRIPTION	BY	DATE

Project No. 30401.19
Date 6/05
Designed KRH
Drawn SOK
Approved JVS

Sheet No. C6

File: 30401.19\CADD\Drawings\CDR DRAWINGS

APPENDIX E
ALASKA ENERGY AUTHORITY TRAINING PROGRAMS

Alaska Energy Authority Training Program

Advanced Power Plant Operator Training

This advanced course prepares the student with the necessary knowledge and skills to diagnose and repair failures in power plants. Program content includes: review of electrical fundamentals; testing equipment; basics of computerized engine control systems; sensors and actuators; electronic signatures and waveforms; and diagnostics and testing.

Bulk Fuel Operator Training

This course provides students with the knowledge and skills necessary to safely operate and maintain a bulk fuel storage facility while complying with state and federal laws. Program content includes: bulk fuel storage facility construction; facility operations; tank farm inspection criteria; facility maintenance; inventory control; tank farm safety; detection of spills; and spill response planning.

Hydro Training

This course will train local operators to ensure that hydro facilities can be sustained over the long-term. Program content includes: overview of the hydro plant, including the hydrology and fuel systems; operation of all systems involved (i.e. hydro, diesel, system voltage control, and safe clearance procedures); maintenance of all systems involved (i.e. hydro, diesel, reservoir and electrical distribution system); and record keeping.

Itinerant Bulk Fuel Training

This course is a follow up to the bulk fuel operator training. An instructor will travel to the communities of students previously trained in the Bulk Fuel Operator Training program to provide on-site training. Training activities will include an initial physical inspection through the tank farm; identification of operation and maintenance needs; hands-on repairs and replacement of minor maintenance needs; and additional on-site training of specific facility concerns and considerations. Training on reporting requirements, if needed, will also be provided.

Power plant Operator Training

This is the entry level course for power plant operators and provides them with the necessary skills to operate and maintain a power plant. Program content includes: theory, maintenance and troubleshooting of engines, electrical systems, and generators; introduction to electrical distribution systems; operation of diesel electric sets; control panels; paralleling generator sets; load management, fuel management; waste heat recovery; plant management; and power plant safety and industrial CPR.

Spill Response Training

This course is on-site in communities that have fully completed, operation-ready bulk fuel tank farms. Training will address all the DEC, US Coast Guard and EPA measures of compliance. This training assures the tank farms will be in compliance with all governing agencies. Training includes a spill response drill.

Utility Clerk Training

This course focuses on Power Cost Equalization (PCE) reporting; Regulatory Commission of Alaska (RCA) reporting; how to apply for bulk fuel loans and general accounting practices that

utilities can use to keep their records and reports current. Courses are planned for Anchorage as well as select hub communities.

For further information, please contact Monica Moore, Training Program Manager at (907)269-3026. *